# MODEL 171
# SYNTHESIZER/FUNCTION GENERATOR

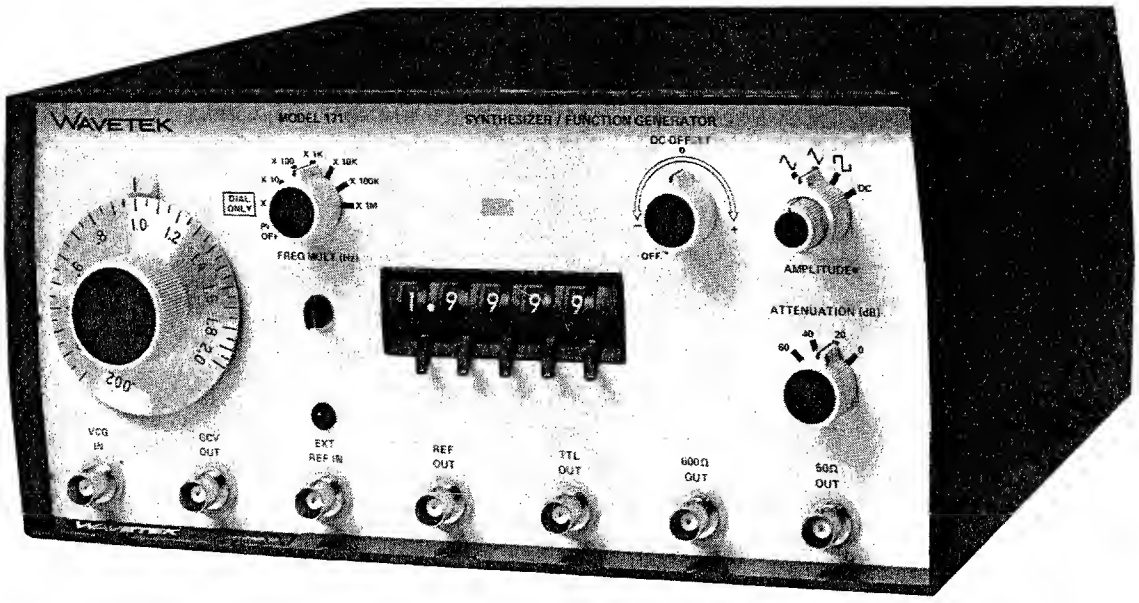


WAVETEK

# MODEL 171
# SYNTHESIZER/FUNCTION GENERATOR

© - 1982 - Wavetek

THIS DOCUMENT CONTAINS INFORMATION PROPRIETARY TO WAVETEK AND IS SOLELY FOR INSTRUMENT OPERATION AND MAINTENANCE. THE INFORMATION IN THIS DOCUMENT MAY NOT BE DUPLICATED IN ANY MANNER WITHOUT THE PRIOR APPROVAL IN WRITING OF WAVETEK.

WAVETEK®
SAN DIEGO
9045 Balboa Ave., San Diego, CA 92123
P. O. Box 651, San Diego, Calif. 92112
Tel 714/279-2200 TWX 910-335-2007

Manual Revision: 5/82
Instrument Release: L

# WARRANTY

All Wavetek instruments are warranteed against defects in material and workmanship for a period of one year after date of manufacture. Wavetek agrees to repair or replace any assembly or component (except batteries) found to be defective, under normal use, during this period. Wavetek's obligation under this warranty is limited solely to repairing any such instrument which in Wavetek's sole opinion proves to be defective within the scope of the warranty when returned to the factory or to an authorized service center. Transportation to the factory or service center is to be prepaid by purchaser. Shipment should not be made without prior authorization by Wavetek.

This warranty does not apply to any products repaired or altered by persons not authorized by Wavetek, or not in accordance with instructions furnished by Wavetek. If the instrument is defective as a result of misuse, improper repair, or abnormal conditions or operations, repairs will be billed at cost.

Wavetek assumes no responsibility for its product being used in a hazardous or dangerous manner either alone or in conjunction with other equipment. High voltage used in some instruments may be dangerous if misused. Special disclaimers apply to these instruments. Wavetek assumes no liability for secondary charges or consequential damages and, in any event, Wavetek's liability for breach of warranty under any contract or otherwise, shall not exceed the purchase price of the specific instrument shipped and against which a claim is made.

Any recommendations made by Wavetek for use of its products are based upon tests believed to be reliable, but Wavetek makes no warranty of the results to be obtained. This warranty is in lieu of all other warranties, expressed or implied, and no representative or person is authorized to represent or assume for Wavetek any liability in connection with the sale of our products other than set forth herein.

# CONTENTS


SECTION 1 INTRODUCTION

1.1 THE MODEL 171 . . . . . 1-1
1.2 SPECIFICATIONS . . . . . 1-1

SECTION 2 INITIAL PREPARATION

2.1 UNPACKING INSPECTION . . . . . 2-1
2.2 PREPARATION FOR USE . . . . . 2-1
2.3 ELECTRICAL ACCEPTANCE CHECK . . . . . 2-1

SECTION 3 OPERATION

3.1 CONTROLS AND CONNECTORS . . . . . 3-1
3.2 OPERATION . . . . . 3-3
3.2.1 Signal Termination . . . . . 3-3
3.2.2 Manual Function Generator Operation . . . . . 3-3
3.2.3 Voltage Controlled Function Generator Operation . . . . . 3-3
3.2.4 Synthesizer Operation . . . . . 3-4
3.2.5 Monitoring the Synthesizer/Function Generator . . . . . 3-4

SECTION 4 CIRCUIT DESCRIPTION

4.1 FUNCTION GENERATOR . . . . . 4-1
4.2 FREQUENCY CONTROL . . . . . 4-1
4.3 WAVEFORM OUTPUT . . . . . 4-2
4.4 OUTPUT ATTENUATOR AND PROTECTION CIRCUIT . . . . . 4-2
4.5 PHASE LOCK LOOP . . . . . 4-2
4.6 SYNTHESIZER LOOP . . . . . 4-2

SECTION 5 CALIBRATION

5.1 FACTORY REPAIR . . . . . 5-1
5.2 REQUIRED TEST EQUIPMENT . . . . . 5-1
5.3 REMOVING GENERATOR COVER . . . . . 5-1
5.4 CALIBRATION . . . . . 5-1

SECTION 6 TROUBLESHOOTING

6.1 FACTORY REPAIR . . . . . 6-1
6.2 TROUBLESHOOTING CHART . . . . . 6-1
6.3 TROUBLESHOOTING INDIVIDUAL COMPONENTS . . . . . 6-1

SECTION 7 PARTS AND SCHEMATICS

7.1 DRAWINGS . . . . . 7-1
7.2 ORDERING PARTS . . . . . 7-1
7.3 ADDENDA . . . . . 7-1

# SAFETY

This instrument is wired for earth grounding via the facility power wiring. Do no bypass earth grounding with two wire extension cords, plug adapters, etc.

BEFORE PLUGGING IN the instrument, comply with installation instructions.

MAINTENANCE may require power on with the instrument covers removed. This should be done only by qualified personnel aware of the electrical hazards.

The instrument power receptical is connected to the instrument safety earth terminal with a green/yellow wire. Do not alter this connection. (Reference: ⏚ or ⚠ stamped inside the rear panel near the safety earth terminal.)

WARNING notes call attention to possible injury or death hazards in subsequent operations.

CAUTION notes call attention to possible equipment damage in subsequent operations.

# SECTION 1
# INTRODUCTION

## 1.1 THE MODEL 171

The Wavetek Model 171 Synthesizer/Function Generator is a precision source of sine, triangle and square waveforms and dc voltage. The generator combines the precision frequency of a synthesizer with the versatility and operating convenience of a function generator. The two major modes of operation are synthesizer and function generator.

Function generator output frequency can be varied from 0.1 Hz to 2 MHz in seven ranges manually by dial and remotely by an applied voltage. In addition to this analog control of frequency, the Model 171 has a 4½ digit switch for synthesizer control of function generator frequency. The synthesizer gives precision (0.005%) frequency accuracy and stability (0.0001%/°C) from 1.000 Hz to 1.9999 MHz in six ranges. When the synthesizer is used to set the frequency, in addition to greater frequency accuracy and stability, the waveform purity is improved over that of the function generator alone.

Amplitude of the waveform is continuously variable from 10V peak-to-peak in a matching termination load (50Ω or 600Ω) down to 10 mV peak-to-peak in four ranges of attenuation (0, 20, 40, 60 dB). DC reference of the waveforms can be offset positively and negatively. The synthesizer can be locked to its own internal reference or to an external 1 MHz reference.

## 1.2 SPECIFICATIONS

The available waveforms, frequencies, amplitudes, operating modes, precision (accuracy) and purity (quality) are listed in the following paragraphs.

### 1.2.1 Versatility

**Output Signals**
Sine ∿ , triangle ∧ , square ⊓ and DC selectable. TTL pulse ⎍ , 1 MHz reference pulse ⎍ and GCV signal proportional to output frequency are also available.

Control
Generator operates in continuous mode. Frequency is controlled manually by dial or digital switch, or externally thru VCG input voltage. Digital switch is operable between 0.1000 and 1.9999 settings and works with all frequency multipliers except X 1.

**Frequency Range**
0.1 Hz to 2 MHz in seven overlapping ranges.

**Operating Frequency Ranges**

| FREQ MULT | Range | Digital Resolution |
|---|---|---|
| X 1 | 0.1 Hz to 2 Hz | N. A. |
| X 10 | 0.1 Hz to 20 Hz | 0.001 Hz |
| X 100 | 0.2 Hz to 200 Hz | 0.01 Hz |
| X 1K | 0.2 Hz to 2 kHz | 0.1 Hz |
| X 10K | 20 Hz to 20 kHz | 1.0 Hz |
| X 100K | 200 Hz to 200 kHz | 10 Hz |
| X 1M | 2 kHz to 2 MHz | 100 Hz |

*NOTE*
*Digital switch valid with all frequency multipliers except X 1 (first range). Frequency ratio of 1000:1 on dial, 20:1 on digital switch.*

**Main Output**
∿ , ∧ , ⊓ ; variable to 20V p-p into open circuit and 10V p-p with matching load at either 50Ω OUT or 600Ω OUT. DC offset of waveform (or DC if selected) is adjustable to ±10 volts open circuit and ±5 volts into matching load. Waveform plus offset is limited to ±10V peak (open circuit).

Output waveforms can be attenuated from 0 dB to 80 dB: 60 dB in 20 dB steps plus a 20 dB vernier for continuous variation (20 dB vernier does not affect offset or DC output).

Optional output protection circuit of zeners and fuses protect both output and common sides from inadvertent connection to external voltage or ac line.

**DC Offset and DC Output**
DC offset of waveform and DC output are selectable and variable thru ±10V (±5V into matching load). Waveform plus offset is limited to ±10V peak (open circuit). Step attenuator attenuates dc level.

**Generator Frequency TTL Output**
TTL pulse has an approximately 50% duty cycle at generator frequency and can drive up to 20 TTL loads.

Optional TTL buffer circuit provides high power TTL compatible signal capable of driving load impedances as low as 50Ω.

**GCV (Generator Controlled Voltage) Output**
0 to +2V (nominal, open circuit) proportional to frequency of main generator. Output impedance 600Ω.

**VCG (Voltage Controlled Generator) Input**
In function generator mode only, VCG voltage as well as dial settings select generator frequency. Frequency may be dc-programmed or ac-modulated by external 0 to 2V signal. Input impedance is 2 kΩ. VCG input can change generator output 1000:1 in function generator mode on all ranges (limited by a minimum VCG frequency of 0.1 Hz).
VCG Input Signal Bandwidth: 100 kHz.
VCG Slew Rate: 0.1 V/μs.

**External Reference Input**
1 MHz sine or square wave external reference clock signal of 1 Vrms to 10 Vrms. 5 kΩ input impedance.

**Reference Output**
TTL level 1 MHz pulse train output when in the synthesizer mode.

Optional TTL buffer circuit provides high power TTL compatible signal capable of driving load impedances as low as 50Ω.

### 1.2.2 Operating Modes

**Synthesizer**
Operates as a synthesizer with function generator outputs locked to the synthesizer frequency. The frequency is determined by the frequency multiplier switch and the digital switch settings. The digital switch is operable from 0.1000 and 1.9999 on all ranges above the X 1 range.

**Voltage Controlled Generator (VCG)**
Operates as a conventional VCG. The frequency is controlled by the dial, multiplier switch and external VCG voltage on all ranges.

### 1.2.3 Horizontal Precision

**Synthesizer Operation**
Accuracy: 0.005% of setting.
Stability: 1 ppm per degree C.
Internal Frequency Standard: 4 MHz crystal with an aging rate of 20 ppm per year.
Locking Time: Within 10% of final frequency in $<$ 100 ms; within 0.01% of final frequency on X 1K, X 10K, X 100K and X 1M ranges in $<$ 300 ms, X 100 in $<$ 2s, X 10 in $<$ 20s.

**Dial/VCG Operation**
Dial Accuracy: ±3% of full scale for 0.1 Hz to 200 kHz; ±5% of full scale for 200 kHz to 2 MHz.
**Time Symmetry**
±1% on all ranges except X 1M range.

### 1.2.4 Vertical Precision

**Amplitude Change With Frequency (Sine)**
Less than ±0.1 dB on all ranges thru X 100K.
Less than ±0.5 dB on X 1M range.

### 1.2.5 Waveform Purity

**Harmonic Distortion**
Less than 0.5% to 20 kHz (typically 0.2%).
Less than 1.0% to 200 kHz (typically 0.5%).
All harmonics 30 dB below fundamental on X 1M range.

**Spurious Signals**
Typically 70 dB below fundamental to 20 kHz and 40 dB below fundamental to 2 MHz (in synthesizer mode only).

**Integrated Signal to Phase Noise**
Typically 30 dB to 200 kHz measured over ±15 kHz bandwidth excluding carrier ±10 Hz (in synthesizer mode only).

**Square Wave Rise and Fall Time**
Less than 75 ns.

**Triangle Linearity**
Greater than 99% to 200 kHz.

**TTL Pulse Rise and Fall Time**
Less than 25 ns (15 ns typical).

### 1.2.6 Environmental

Specifications apply at 25°C ±5°C. Instrument will operate from 0°C to +50°C.

### 1.2.7 Mechanical

**Dimensions**
11¼ in./28.6 cm wide; 5¼ in./13.3 cm high; 10¾ in./27.3 cm deep.

**Weight**
8.5 lb/3.85 kg net; 12 lb/5.5 kg shipping.

### 1.2.8 Power

90 to 110V, 105 to 125V, 180 to 220V or 210 to 250V; 50 to 400 Hz; less than 18 watts.

*NOTE*

*All specifications apply when frequency dial is between 0.1 and 2.0 or digital switch is between 0.1000 and 1.9999, amplitude is at 10V p-p and output is from the 50Ω BNC into a 50Ω load.*

# SECTION 2
# INITIAL PREPARATION

## 2.1 UNPACKING INSPECTION

After carefully unpacking the instrument, inspect the external parts for damage to knobs, dials, indicators, surface areas, etc. If there is damage, file a claim with the carrier who transported the instrument. Retain the shipping container and packing material for use in case reshipment is required.

## 2.2 PREPARATION FOR USE

Before connecting the instrument to line power, be sure the rear panel 115/230V and HI/LO switches are set to the value nearest the line voltage and that the fuse is correct for the switch setting. Be sure that the plug on the power cord is the proper mate for the line receptacle.

| AC Line Voltage | Switch A | Switch B | Fuse (SB) |
|---|---|---|---|
| 90 - 110 | 115 | LO | 3/8 amp |
| 105 - 125 | 115 | HI | 3/8 amp |
| 180 - 220 | 230 | LO | 3/16 amp |
| 210 - 250 | 230 | HI | 3/16 amp |

## 2.3 ELECTRICAL ACCEPTANCE CHECK

This checkout procedure verifies the generator operation. If a malfunction is found, refer to the Warranty in the front of the manual. An oscilloscope, counter, three short lengths of 50Ω coax cable, a 50Ω feedthru load and a 0 to ±2V voltage source are required (figure 2-1). Circled numbers index controls and connectors to figure 3-1.

1. Preset the generator front panel controls as follows:

| Control | Position |
|---|---|
| Frequency Dial ① | 1.0 |
| FREQ MULT | X 1K |
| Digital Switch ④ | 1.9999 |
| DC OFFSET | OFF |
| Waveform Selector ⑥ | ∿ |
| AMPLITUDE | Full cw |
| ATTENUATION | 0 |
| Dial/Digital Switch ② | Toward Dial |

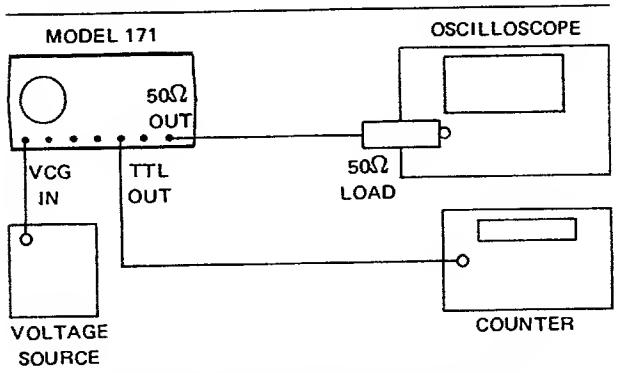


Figure 2-1. Performance Checkout Setup

Table 2-1. Performance Checkout

| Step | Control | Position/Operation | Observe |
|---|---|---|---|
| | **Function** | | |
| 1 | Adjust the oscilloscope for several cycles of sine wave. | | |
| 2 | Waveform Selector | ∿ , ⊔ , DC, ∿ | Waveform changes from ∿ to ∿ to ⊔ to a 0V dc level then ∿ . |
| | **Amplitude** | | |
| 1 | AMPLITUDE | Ccw to 12 o'clock | Waveform amplitude reduces. |

Table 2-1. Performance Checkout (Continued)

| Step | Control | Position/Operation | Observe |
|---|---|---|---|
| 2 | DC OFFSET | 9 o'clock, then slowly to full cw (return to OFF) | Waveform offset negatively, then positively (clipping may occur). |
| 3 | ATTENUATION | 20, 40, 60 (return to 0) | Waveform amplitude decreases with each step. |
| | **Outputs** | | |
| 1 | Remove 50Ω load and reconnect cable. Remove the 50Ω OUT connection and place it on the 600Ω OUT BNC. | | Unloaded 50Ω OUT and 600Ω OUT are identical. |
| 2 | Remove the 600Ω OUT connection and place it on the TTL OUT. | | Square pulse at 1 kHz. |
| 3 | Remove the TTL OUT connection and place it on the REF OUT. Flip dial/digital switch selector to digital switch side. | | 1 MHz pulse. |
| 4 | Remove the REF OUT connection and place it on the GCV OUT. | | 2 Vdc level. |
| 5 | Flip dial/digital switch selector to dial side. | | 1 Vdc level. |
| | **Frequency** | | |
| 1 | Remove GCV OUT connection and place on 50Ω OUT. | | |
| 2 | FREQ MULT | Use each multiplier X 1 thru X 1M (return to X 1). | Observe an increase in frequency while stepping from X 1 to X 1M. |
| 3 | Dial | Vary from 2.0 to .2 (return to .2). | Observe a corresponding change in frequency. |
| 4 | Connect a 0 to ±2V source to the VCG IN BNC. Vary the voltage positively. | | Observe a change in frequency proportional to the change in VCG voltage. |
| 5 | Dial | 2.0 | |
| 6 | Voltage Source | Vary the voltage negatively. | Observe a change in frequency proportional to the VCG voltage. |
| 7 | Disconnect the voltage source. | | |
| 8 | Dial/Digital Switch Selector | Switch toward the digital switch. | 1.9999 kHz. |
| 9 | Digital Switch | Set each position of the digital switch. | Observe counter readout corresponding to set of digital switch. |

# SECTION 3
# OPERATION

## 3.1 CONTROLS AND CONNECTORS

The generator front panel controls and connections shown in figure 3-1 are keyed by circled numbers to the following descriptions.

### (1) Frequency Dial

When the frequency dial is selected by the dial/digital switch selector (2) the index (1A) lights and the frequency output is determined by the dial, FREQ MULT (3) and VCG (14) voltage.

### (2) Dial/Digital Switch Selector

Places the instrument in either function generator (dial controlled) or synthesizer (digital switch controlled) mode. Respective dial index (1A) or digital switch index (4A) lights to indicate operation mode.

### (3) FREQ MULT (Hz)

Power is turned on when frequency range is selected at FREQ MULT. The multipliers are for the dial (1) and digital switch (4) readings and the VCG (14) voltage.

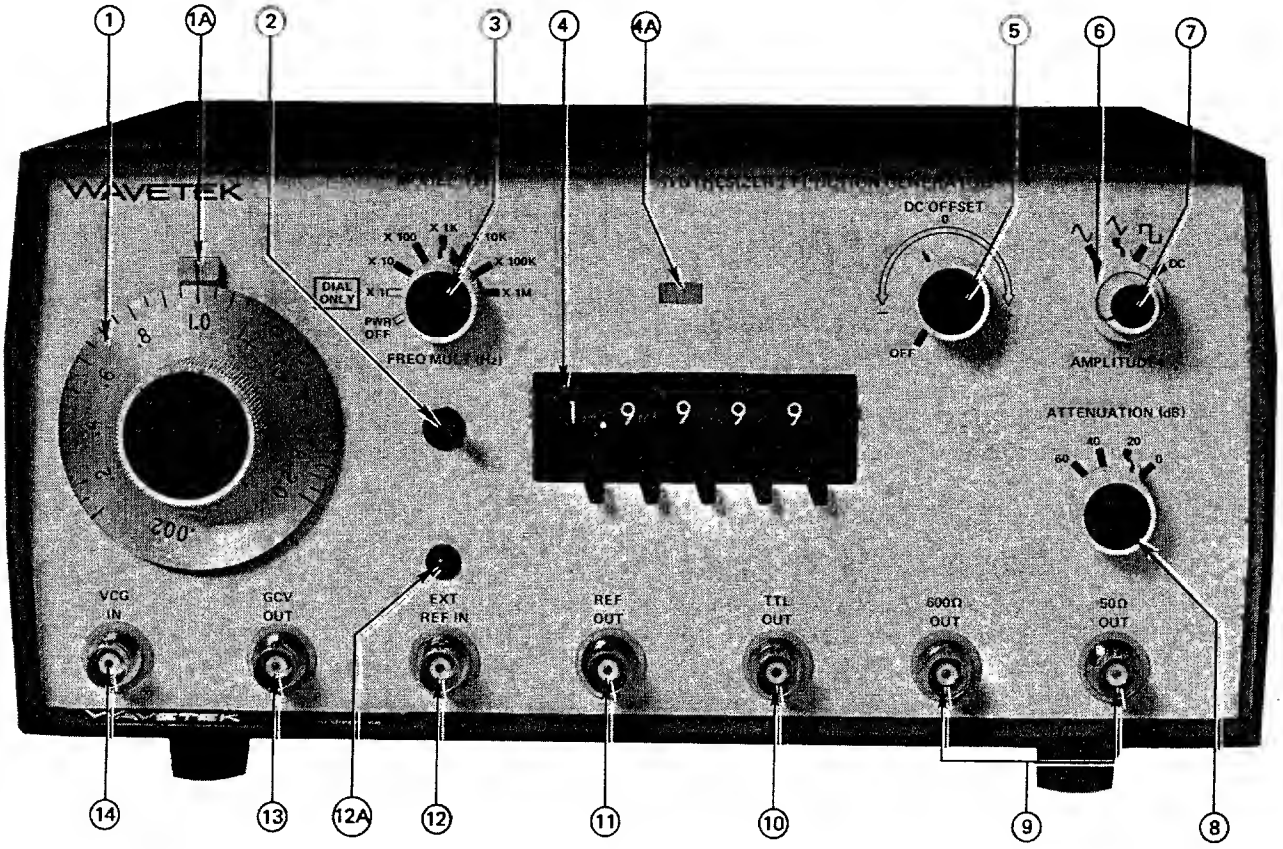

④ Digital Switch

When the digital switch is selected by the dial/digital switch selector ② the index (4A) lights and the frequency output is determined by the digital switch and the FREQ MULT.

⑤ DC OFFSET

Rotating DC OFFSET clockwise past 12 o'clock offsets dc output or dc center reference of the output waveform positive; when counterclockwise, negative. When OFF, the dc output is signal ground or the output waveform is balanced around signal ground (0V in figure 3-2).

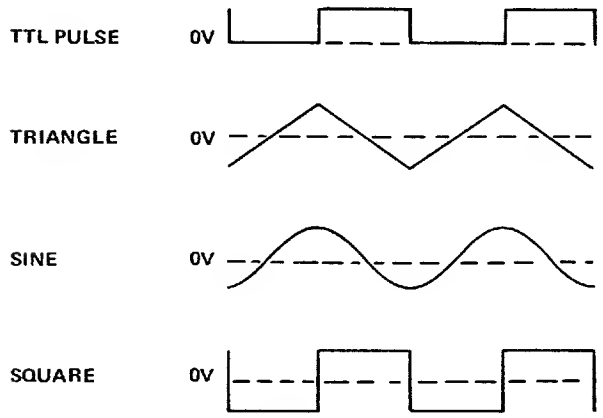


Figure 3-2. Output Waveforms

⑥ ∿ , ⩘ , ⊓ and DC (Waveforms)

Sine ∿ , triangle ⩘ and square ⊓ waveforms are selected by the larger of the two concentric controls; the DC position provides a dc voltage output controlled by DC OFFSET. Outputs appear at 50Ω OUT and 600Ω OUT.

⑦ AMPLITUDE

Rotating AMPLITUDE fully clockwise provides maximum peak-to-peak output at 50Ω OUT and 600Ω OUT; rotating counterclockwise gives up to 20 dB attenuation. Also see ATTENUATION ⑧. AMPLITUDE does not affect dc offset or dc output.

⑧ ATTENUATION

With a 600Ω load on the 600Ω OUT connector or a 50Ω load on the 50Ω OUT connector, output voltage for each attenuation is:

| | Amplitude Control | |
|---|---|---|
| Attenuation | Full cw | Full ccw |
| 0 | 10V p-p | 1V p-p |
| 20 | 1V p-p | 100 mV p-p |
| 40 | 100 mV p-p | 10 mV p-p |
| 60 | 10 mV p-p | (Not specified) |

⑨ 600Ω OUT and 50Ω OUT Connectors

600Ω OUT and 50Ω OUT provide variable frequency and amplitude ∿ , ⩘ , ⊓ and DC. Maximum signal amplitude is 10V p-p with matching loads (20V p-p into open circuit).

⑩ TTL OUT Connector

A fixed amplitude Transistor-Transistor Logic (TTL) square pulse train of the output frequency. (TTL levels are 0V to 0.4V for a logic low and 2.4V to 5V for a logic high.) The output can drive up to 20 TTL loads. The pulse train can also be used as a synchronizing reference to 50Ω OUT and 600Ω OUT. Phase of output waveforms relative to the TTL pulse is shown in figure 3-1.

⑪ REF OUT Connector

A fixed amplitude Transistor-Transistor Logic (TTL) pulse train of 1 MHz whose origin is an internal clock oscillator or, if indicator (12A) is lit, the external reference signal of 1 MHz.

⑫ EXT REF IN Connector

Input for a 1 MHz sine or square wave external reference clock signal. The signal must be at least 1 Vrms. Synthesizer frequencies are referenced to this signal when indicator (12A) is lit.

⑬ GCV OUT Connector

DC excursions at the Generator Controlled Voltage output (GCV OUT) of 0V to about 2V proportionally represents frequency within the range indicated by FREQ MULT.

⑭ VCG IN Connector

DC excursions at the Voltage Controlled Generator input (VCG IN) proportionally control frequency within the range determined by FREQ MULT. Positive voltage increases the frequency set by the dial ① ; negative voltage decreases the frequency. Use in function generator mode only.

## 3.2 OPERATION

Operation is described as function generator operation and synthesizer operation. The generator is ready to operate as soon as a frequency multiplier is selected.

### 3.2.1 Signal Termination

Proper signal termination, or loading, of the generator connectors is necessary for its specified operation. For example, the proper termination of the 50Ω OUT connector is shown in figure 3-3. Placing the 50 ohm terminator, or 50 ohm resistance, in parallel with a higher impedance, matches the receiving instrument input impedance to the generator output impedance, thereby minimizing signal reflection or power loss on the line due to impedance mismatch.

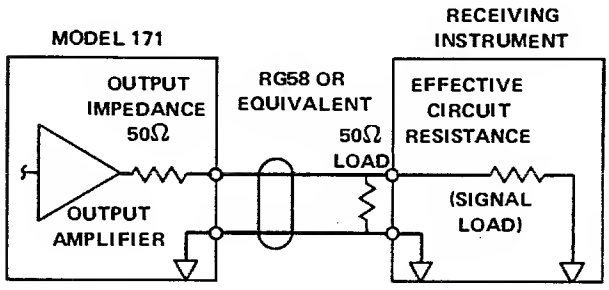


**Figure 3-3. Signal Termination**

The input and output impedances of the generator connectors are listed below:

| Connector | Impedance |
|---|---|
| 50Ω OUT | 50Ω |
| 600Ω OUT | 600Ω |
| TTL OUT | * |
| REF OUT | * |
| VCG IN | 2 kΩ |
| GCV OUT | 600Ω |
| REF IN | 5 kΩ |

*The TTL OUT connector can drive up to 20 Transistor-Transistor Logic (TTL) loads (low level between 0V and 0.4V, and high level between 2.4V and 5V). REF OUT can drive up to 3 TTL loads. Addition of the TTL buffer option gives these outputs the capability of driving a 50Ω load.

### 3.2.2 Manual Function Generator Operation

For basic operation, select the waveform frequency and amplitude. The following steps demonstrate manual control of the function generator. (Circled numbers are keys to figure 3-1.)

| Step | Control/Connector | Setting |
|---|---|---|
| 1 | 50Ω OUT or 600Ω OUT | Connect circuit to either output (refer to paragraph 3.2.1). |
| 2 | Dial/Digital Switch Selector ② | Set toward the dial. |
| 3 | FREQ MULT | Set to desired range of frequency. |
| 4 | Frequency Dial ① | Set to desired frequency within the range. |
| 5 | Waveform Selector ⑥ | Set to desired waveform. |
| 6 | DC OFFSET | Set as desired. Limit waveform amplitude to prevent clipping (see figure 3-4). |
| 7 | AMPLITUDE and ATTENUATION | Select for desired amplitude. |

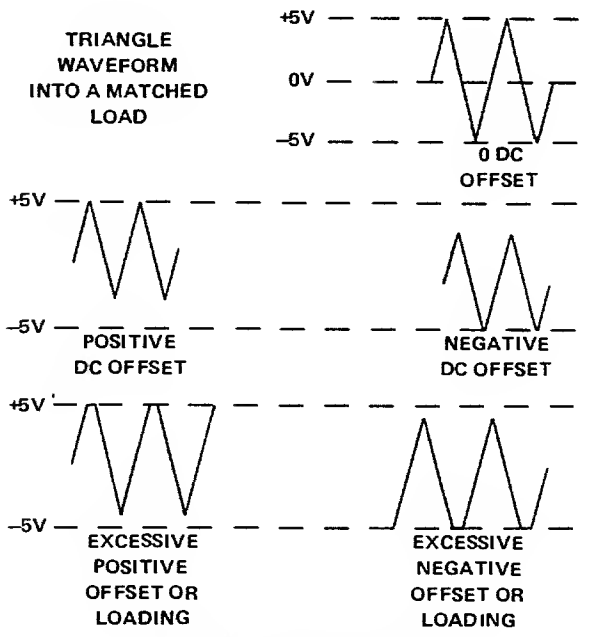


**Figure 3-4. DC OFFSET Control**

### 3.2.3 Voltage Controlled Function Generator Operation

Operation as a voltage controlled function generator (VCG) is as for a manually controlled function generator, only the frequency within particular ranges is additionally controlled with dc levels (±2V excursions) injected at the VCG IN connector. Perform the steps given in paragraph 3.2.2, only set the frequency dial to determine a reference from which the frequency is to be voltage controlled.

1. For frequency control with positive dc inputs at VCG IN, set the dial for a lower frequency limit.

2. For frequency control with negative dc inputs at VCG IN, set the dial for an upper frequency limit.

3. For modulation with an ac input at VCG IN, set the dial at the desired center frequency. Do not exceed the maximum dynamic range of the selected frequency range.

Figure 3-5 is a nomograph with examples of dial and voltage effects. Example 1 shows that with 0V VCG input, frequency is as determined by the main dial setting, 1.0 in this example. Example 2 shows that with a positive VCG input, output frequency is increased. Example 3 shows that with a negative VCG input, output frequency is decreased. (Note that the Output Frequency Factor column value must be multiplied by a frequency range multiplier to give the actual output frequency.)

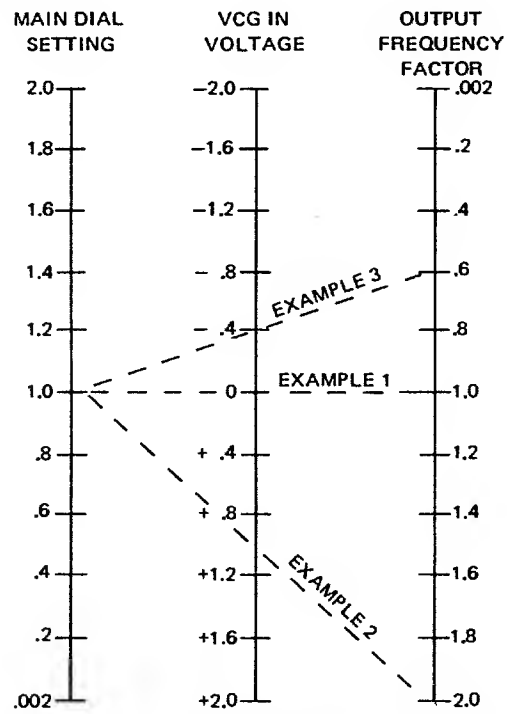


Figure 3-5. VCG Voltage-to-Frequency Nomograph

*NOTE*

*Nonlinear operation results when the VCG input voltage is excessive; that is, when the attempted generator frequency exceeds the range setting (2 times the multiplier setting) or in the other direction, 1/1000th of the range setting.*

The up to 1000:1 VCG sweep of the generator frequencies available in each range results from a 2V excursion at the VCG IN connector. With the frequency dial set to 2.0, excursions between −2V and 0V at VCG IN provide the up to 1000:1 frequency sweep. With the dial set to .002, excursions between 0V and +2V at VCG IN provide the up to 1000:1 sweep within the set frequency range.

### 3.2.4 Synthesizer Operation

For synthesizer operation, select the waveform, frequency and amplitude. The following steps demonstrate synthesizer control. (Circled numbers are keys to figure 3-1.)

| Step | Control/Connector | Setting |
|---|---|---|
| 1 | 50Ω OUT or 600Ω OUT | Connect the circuit to either output (refer to paragraph 3.2.1). |
| 2 | Dial/Digital Switch Selector (2) | Set toward digital switch. |
| 3 | FREQ MULT | Set to desired range of frequency. |
| 4 | Digital Switch (4) | Set to desired frequency within the range. |
| 5 | Waveform Selector (6) | Set to desired waveform. |
| 6 | DC OFFSET | Set as desired. Limit waveform amplitude to prevent clipping (see figure 3-4). |
| 7 | AMPLITUDE and ATTENUATION | Select desired amplitude. |

Synthesizer frequencies are normally referenced to an internal crystal oscillator. However, an external 1 MHz sine or square wave reference signal can be applied at REF IN; the indicator (13A) will light, indicating a proper external reference in use.

### 3.2.5 Monitoring the Synthesizer/Function Generator

Besides the 50Ω OUT and 600Ω OUT main generator outputs, the GCV OUT connector supplies a voltage proportional to the generator frequency, the TTL OUT connector supplies a TTL compatible pulse train at the generator frequency, and the REF OUT supplies a TTL compatible 1MHz pulse train.

The GCV OUT signal is used to drive the frequency axis of an X-Y recorder or oscilloscope; the generator frequency TTL OUT signal is used to synchronize other devices to the generator or to drive TTL level inputs, and the REF OUT signal is used to reference other 171's to a master crystal oscillator.

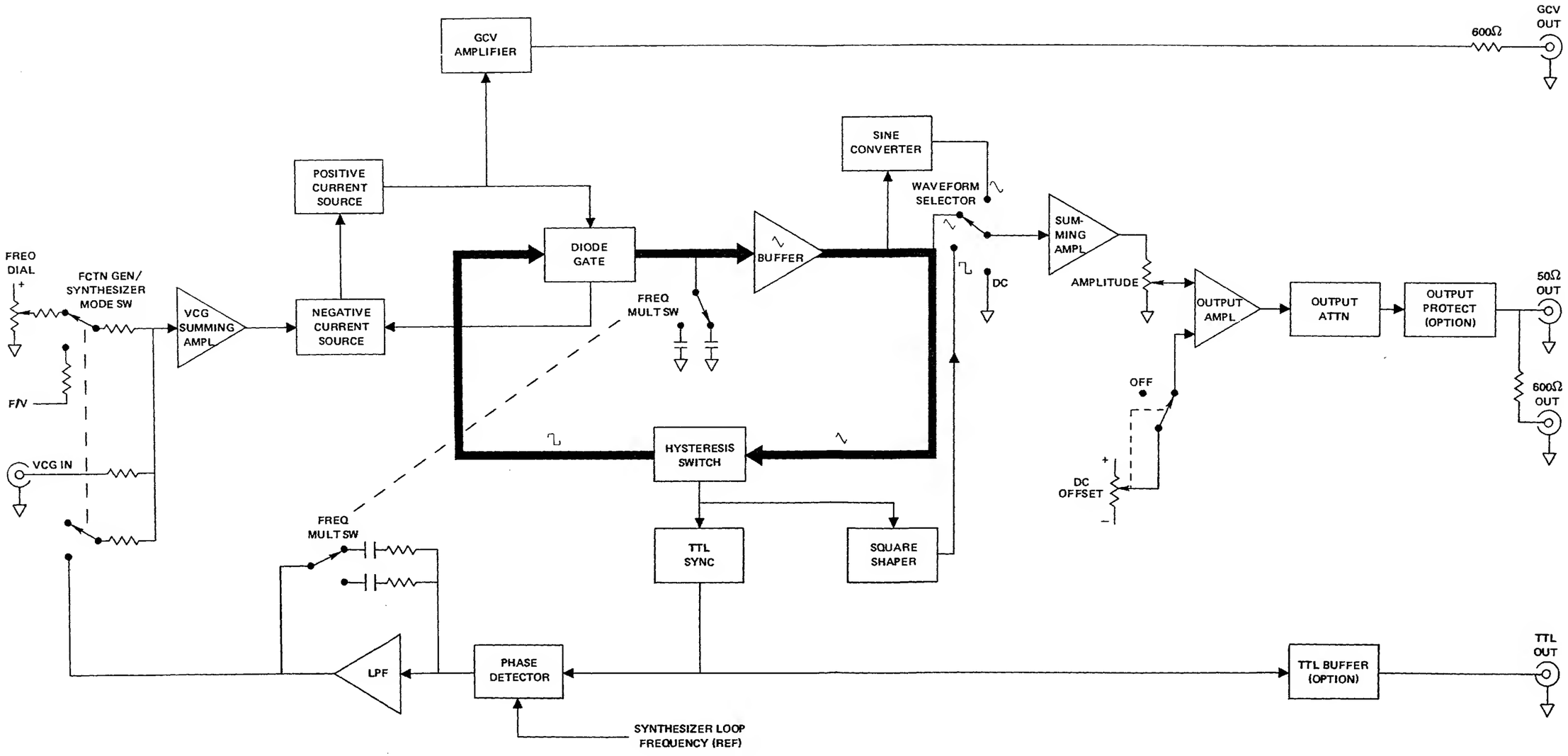




**Figure 4-1. Function Generator Block Diagram**

# SECTION 4
# CIRCUIT DESCRIPTION

## 4.1 FUNCTION GENERATOR

As shown in figure 4-1, the VCG summing amplifier sums the currents from the frequency dial and VCG input connector in function generator mode or from the low pass filter output and the frequency-to-voltage (F/V) converter output in synthesizer mode. The low pass filter is part of the generator frequency phase lock loop which provides a feedback current that corrects generator frequency to be exactly that of the synthesizer loop output. (Phase lock loop operation is described in paragraph 4.5.) The F/V input is also from the synthesizer loop and provides a gross correction to increase the response time of the generator to changes in synthesizer frequency programming.

The VCG summing amplifier is a noninverting buffer whose output current is used to control a positive current source and a negative current source. The currents from the two current sources are equal and opposite polarity and the magnitudes are directly proportional to the current of the VCG summing amplifier output. The diode gate, which is controlled by the hysteresis switch, is used to switch the positive current or the negative current to the integrating capacitor selected by the frequency multiplier. If the positive current is switched into the capacitor, the voltage across the capacitor will increase linearly to generate the positive slope of the triangle wave. If the current is negative, the voltage across the capacitor will decrease linearly to produce the negative slope.

The triangle buffer amplifier is a unity gain amplifier whose output is fed to the hysteresis switch as well as to the sine converter. The hysteresis switch has two voltage limit points (+1.25V and −1.25V). (See figure 4-2.)

During the time the output voltage of the triangle buffer amplifier is increasing, the output voltage of the hysteresis switch is positive, but when the output voltage of the triangle amplifier reaches +1.25V, it triggers the hysteresis switch causing the switch output to become negative. Once the control voltage into the diode gate becomes negative, it will switch the positive current out and switch the negative current in to the integrating capacitor, starting a linear decrease of the voltage across the capacitor. When the decreasing voltage reaches −1.25V, the output of the hysteresis switch will switch back to positive, reversing the process. This action generates the triangle waveform as shown in figure 4-2. Since the output of the hysteresis switch is a square wave, the result is simultaneous generation of a square wave and triangle wave at the same frequency.

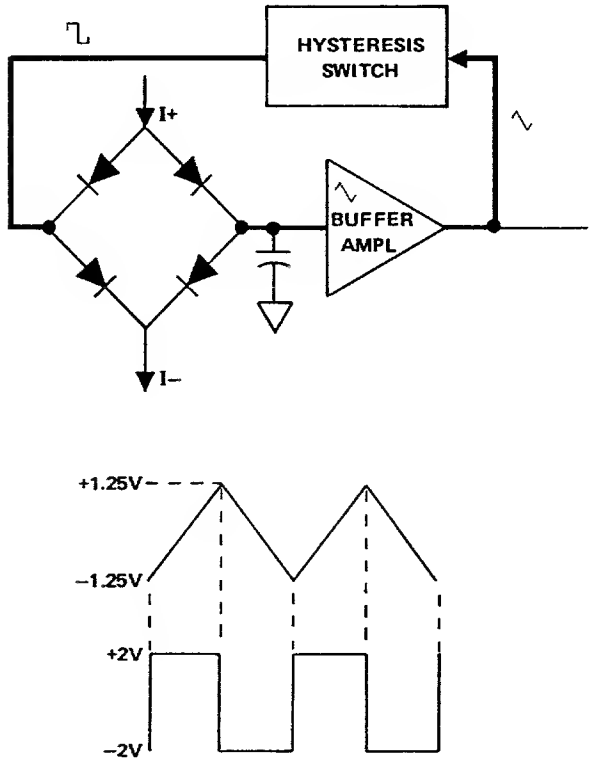


Figure 4-2. Generator Loop and Waveforms

## 4.2 FREQUENCY CONTROL

The output frequency is determined by the magnitude of the integrating capacitor selected by the frequency multiplier and the magnitude of the positive and negative current sources (figure 4-1). Since the current magnitudes are linearly proportional to the sum of the VCG current, the output frequency will also be linearly proportional to the current sum.

By using current division, the magnitude of the capacitor is effectively increased, allowing the generation of lower fre-

quencies. Figure 4-3 is the simplified diagram showing current divider operation. By reducing integration current precisely by a factor of 10 while holding triangle wave amplitude constant, it is possible to extend the lower frequency range by a factor of 10 with fixed capacitance C. Since points A and B are at the equipotential points, constant current output I can be divided by resistance ratio of R and 9R. Then, integration current of capacitor C is reduced to 0.1 I. The lower current extends the frequency range of the function generator by a factor of 10. The same theory is applied to extend the frequency range by a factor of 100.

## 4.3 WAVEFORM OUTPUT

The inverted output of the hysteresis switch is fed to the TTL buffer amplifier and also the square wave shaper (figure 4-1). The square wave shaper consists of a shaping circuit which limits the output swing to ±1.25 volts.

The output signal from the triangle buffer amplifier is applied to the sine converter, which uses a diode-resistor network with nonlinear sections to shape a sine wave.

The sine, triangle or square waveform is fed to the summing amplifier through the waveform selector switch. The output of summing amplifier is fed through the amplitude control to the output amplifier. The output amplifier is an inverting amplifier whose output is capable of driving 10V p-p into selected load impedance.

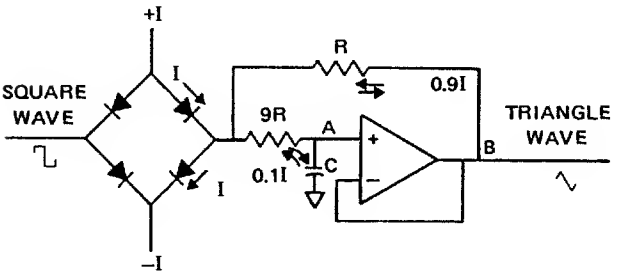


Figure 4-3. Current Divider

## 4.4 OUTPUT ATTENUATOR AND PROTECTION CIRCUIT

The signal from the output amplifier is routed through an attenuation network for step attenuation. If the optional protection circuit is installed, the instrument output circuits are protected from input voltages by a zener and fuse network protecting both the signal and ground sides of the output BNC's. Two source impedances, 50 and 600 ohms, are provided at the outputs.

## 4.5 PHASE LOCK LOOP

A phase lock loop is shown in figure 4-4. The phase detector output is proportional to the difference in frequency between the two inputs. This difference signal is used to control a voltage controlled oscillator (VCO). The VCO output signal is fed back to the phase detector, where the VCO frequency is compared to the reference input to the detector. This reference input is, for example, a constant 1.0000 kHz signal. The loop becomes stable when the VCO frequency equals the reference frequency, at which time the detector difference signal becomes zero.

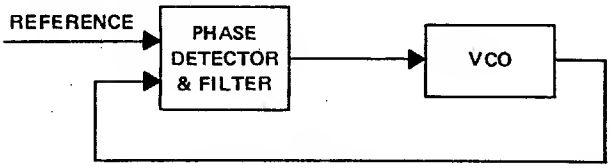


Figure 4-4. Phase Lock Loop

## 4.6 SYNTHESIZER LOOP

The reference frequency for the synthesizer is provided by an internal 4 MHz crystal or by an external 1 MHz signal (figure 4-5). Either source provides a 1 MHz REF OUT signal which is also reduced to 1.0000 kHz for the reference input to the phase detector.

The phase detector difference signal is a pulse train whose spacing and magnitude reflect the phase difference. The low pass filter (LPF) shown in the synthesizer loop converts this pulse train to a voltage inversely proportional to the phase difference. Noise, particularly 1 kHz, is filtered by the 400 Hz cutoff filter. The dc voltage controls the VCO frequency using a varactor diode as the tunable element.

The programmable divider in the loop (÷ P) is controlled by the front panel digital switch; for any division of frequency programmed, the loop rapidly drives the phase detector's other input to 1.0000 kHz. For example, if divide by 16000 is programmed, an imbalance is initially set up and the VCO frequency is increased such that $f_{VCO} \div 16000 = 1.0000$ kHz, which returns the loop to a stable condition. (The VCO frequency ($f_{VCO}$) was 16 MHz.)

The VCO has a tunable range of only 3:1, hence the VCO range has been limited to 8 to 20 MHz. When below 8 MHz from the VCO would be required,a prescaler is placed in the loop, which is also controlled by the digital switch, to keep the division factor large, which in turn keeps VCO frequency greater than 8 MHz. The prescaler output is a 1M to 20 MHz signal. The output of the prescaler is divided by 10 before the frequency ranging circuit to give the frequency equivalent to the digital switch programmed value. The resulting fre-

quency is divided by a multiple of 10, as controlled by the FREQ MULT range switch, and fed to the function generator phase lock loop (figure 4-1).

A 10k to 200 kHz output is used to create the F/V signal which gives rapid function generator response to frequency changes. A one-shot changes the signal to fixed width pulses whose spacing is frequency dependent. These are converted to a frequency dependent voltage level at the F/V converter output.

One pole of the function generator/synthesizer mode switch furnishes the ground signal CLK KILL. CLK KILL stops synthesizer loop activity when the instrument is in function generator mode or set on X 1, a dial-only range. Lamps indicating mode are also controlled by this CLK KILL.

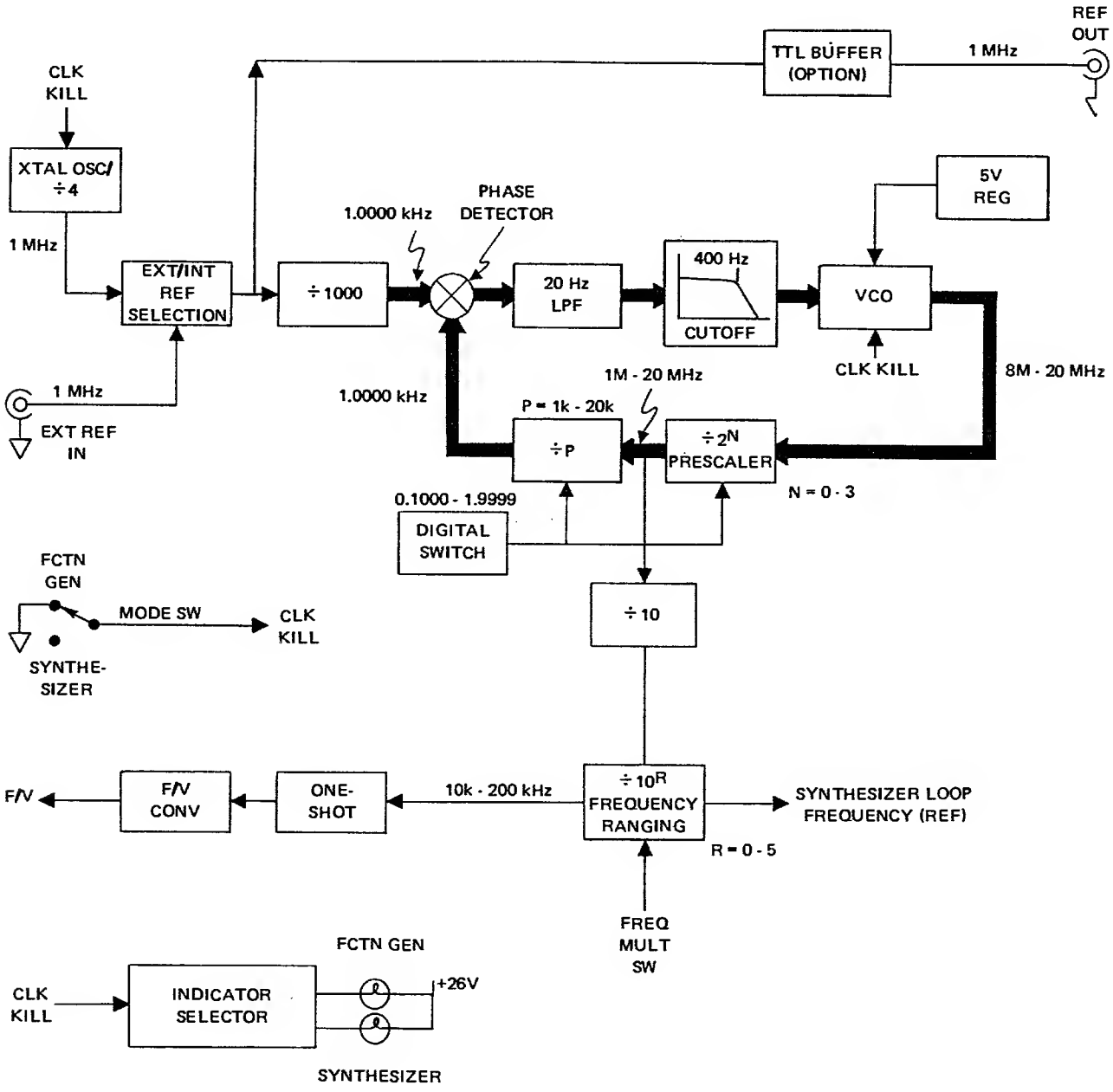


Figure 4-5. Synthesizer Phase Lock Loop

# SECTION 5
# CALIBRATION

## 5.1 FACTORY REPAIR

Wavetek maintains a factory repair department for those customers not possessing the necessary personnel or test equipment to maintain the instrument. If an instrument is returned to the factory for calibration or repair, a detailed description of the specific problem should be attached to minimize turnaround time.

## 5.2 REQUIRED TEST EQUIPMENT

DVM (3½ digit)

Distortion Analyzer (1% F.S.) HP334A

Oscilloscope (≥ 40 MHz bandwidth, X 10 horizontal magnification, dc triggering to 1 Hz)

BNC Termination (50Ω ≤ 1%, ≥ 1W)

Frequency Counter (6 digits, time base accuracy ≥ 50 ppm)

Low Frequency Spectrum Analyzer HP3580A

## 5.3 REMOVING GENERATOR COVER

For main board access, remove the four screws in the lower cover, place the instrument on its feet and lift off the top cover. For later access to the synthesizer board, remove the four screws from the inside corners of the lower board that attach it via standoffs to the lower cover. Do not remove the lower cover unless necessary, because it supports front and rear panels.

## 5.4 CALIBRATION

After referring to the following preliminary data, perform calibration, as necessary, per table 5-1. If performing partial calibration, check previous settings and adjustments for applicability.

1. Unless otherwise noted, all measurements made at the 50Ω OUT connector should be terminated into a 50Ω (≤ 1%, 1W) load.

2. Before connecting the unit to an ac source, check the ac line circuit to make sure the 115/230 volt switch is set at the correct position (see paragraph 2.2).

3. Start the calibration by setting the front panel switches as follows:

Dial ..... 2.0
FREQ MULT ..... X 1K
Mode (toggle switch) ..... Toward Dial
Digital Switch ..... 0.1000
DC OFFSET ..... OFF
Function ..... DC
AMPLITUDE ..... ccw
ATTENUATION ..... 0

4. Allow the unit to warm up at least 30 minutes for final calibration. Start the calibration on main board. All test points are located on the main board.

**Table 5-1. Calibration Chart**

| Step | Check | Tester | Cal Points | Control Settings | Adjust | Desired Results | Remarks |
|---|---|---|---|---|---|---|---|
| 1 | Power supply regulation | DVM | TP2 (TP1 ground) | | R20 | +15 ±0.01V | Main board |
| 2 | | | TP3 (−15V) | | | −15 ±0.05V | |
| 3 | Output dc balance | Scope or DVM | 50Ω OUT | | R116 | 0 ±0.01 Vdc | |
| 4 | | | | AMPLITUDE: cw | R141 | | |

Table 5-1. Calibration Chart (Continued)

| Step | Check | Tester | Cal Points | Control Settings | Adjust | Desired Results | Remarks |
|---|---|---|---|---|---|---|---|
| 5 | Distortion | Distortion analyzer (50Ω terminated | 50Ω OUT | Function ∿ | R72<br>R93 | Minimum distortion | |
| 6 | VCG null | Scope | | FREQ MULT: X 100K<br>Function: ⊓<br>Dial: full cw<br>Scope vert: 2V/div<br>Scope horiz: .5 ms/div | R40 | Minimum frequency shift | Adjust generator dial to display one cycle on scope. Alternately short and open VCG IN BNC while adjusting R40. |
| 7 | Horizontal symmetry | | | Scope Horiz: X 10 on | R42 | Maximum symmetry | Alternately switch scope triggering from positive to negative slope while adjusting R42. |
| 8 | | | | Dial: 01<br>FREQ MULT: X 10<br>Scope sweep: 0.1s/div, dc triggering | R60 | | |
| 9 | Frequency accuracy | Counter | | Dial: 2.0<br>FREQ MULT: X 1 thru X 10K | R32 | Best frequency accuracy over X 1 thru X 10K | |
| 10 | | | | FREQ MULT: X 1M<br>Function: ⊓<br>Dial: 2.0 | C37 | 2.020 MHz | |
| 11 | | | | Function: ⊓, ∿, ∿ | | Best frequency tracking on X 1M range | |
| 12 | Internal reference | | REF OUT | Mode toggle switch: towards digital switch | C1 | 1 MHz ±20 Hz | C1 is on synthesizer board. |
| 13 | F/V balance | Scope or DVM | TP5 (TP1 common) | FREQ MULT: X 10K<br>Digital Switch: 0.1000 | R31 | 0 ±0.1 Vdc | |
| 14 | F/V gain | | | Digital Switch: 0.9999 | R28 | +1 Vdc approx | |
| 15 | | | | Digital Switch: 1.9999 | | −1 Vdc approx | If necessary, reset R28 for best balance between 0.9999 and 1.9999. |
| 16 | Frequency range | Counter | 50Ω OUT | FREQ MULT: X 1M thru X 10<br>Function: ⊓ | | Reading ±0.005% each setting | |

Table 5-1. Calibration Chart (Continued)

| Step | Check | Tester | Cal Points | Control Settings | Adjust | Desired Results | Remarks |
|---|---|---|---|---|---|---|---|
| 17 | Frequency bits | Counter | 50Ω OUT | FREQ MULT: X 10K<br>Digital Switch: 0.1111 thru 0.9999 | | Proper reading on counter | |
| 18 | Spectral purity | Spectrum Analyzer | | Function: ∿<br>Digital Switch: 1.9999 | | Spurious signals below −70 dB. Noise floor below −60 dB. | Set 3580A controls for a 3 Hz bandwidth with minmum smoothing; scanning 20 Hz/div at 5s/div. Check that average of noise floor at $f_0$ + 3 Hz is below −60 dBc and that no line related spurs are above −70 dBc. Keep power lines away from analyzer input. |

# SECTION 6
# TROUBLESHOOTING

## 6.1 FACTORY REPAIR

Wavetek maintains a factory repair department for those customers not possessing the necessary personnel or test equipment to maintain the instrument. If an instrument is returned to the factory for calibration or repair, a detailed description of the specific problem should be attached to minimize turnaround time.

## 6.2 TROUBLESHOOTING CHART

Troubleshooting charts are given in figures 6-1 thru 6-4. The charts do not cover every possible trouble, but will be an aid in systematically isolating faulty components.

Figure 6-1. Initial Checks

Figure 6-2. Generator Mode Checks

Sheet 1 Generator Check
Sheet 2 Generator Loop Check
Sheet 3 VCG Check
GCV Check
TTL Check

Figure 6-3. Power Supply Checks

Figure 6-4. Synthesizer Mode Checks

Sheet 1 F/V Check
Sheet 2 Synthesizer Loop Checks
Sheet 3 Synthesizer Loop Checks
Sheet 4 Frequency Ranging Check
Sheet 5 Generator Phase Lock Loop Check
Sheet 6 Reference Selector Check

## 6.3 TROUBLESHOOTING INDIVIDUAL COMPONENTS

### 6.3.1 Transistor

1. A transistor is defective if more than one volt is measured across its base emitter junction in the forward direction.
2. A transistor when used as a switch may have a few volts reverse bias voltage.
3. If the collector and emitter voltages are the same, but the base emitter voltage is less than 500 mV forward voltage (or reversed bias), the transistor is defective.
4. A transistor is defective if its base current is larger than 10% of its emitter current (calculate currents from voltage across the base and emitter series resistors).
5. In a transistor differential pair (common emitter stages), either their base voltages are the same in normal operating condition, or the one with less forward voltage across its base emitter junction should be off (no collector current); otherwise, one of the transistors is defective.

### 6.3.2 Diode

1. A diode is defective if there is greater than one volt (typically 0.7 volt) forward voltage across it.

### 6.3.3 Operational Amplifier (e.g., UA741C, LM318)

1. The "+" and "–" inputs of an operational amplifier will have less than 15 mV voltage difference when operating under normal conditions.
2. If the output voltage stays at maximum positive, its "+" input voltage should be more positive than its "–" input voltage, or vice versa; otherwise, the operational amplifier is defective.

### 6.3.4 Capacitor

1. Shorted capacitors have zero volts across their terminals.
2. Opened capacitor can be located (but not always) by using a good capacitor connected in parallel with the capacitor under test and observing the resulting effect.

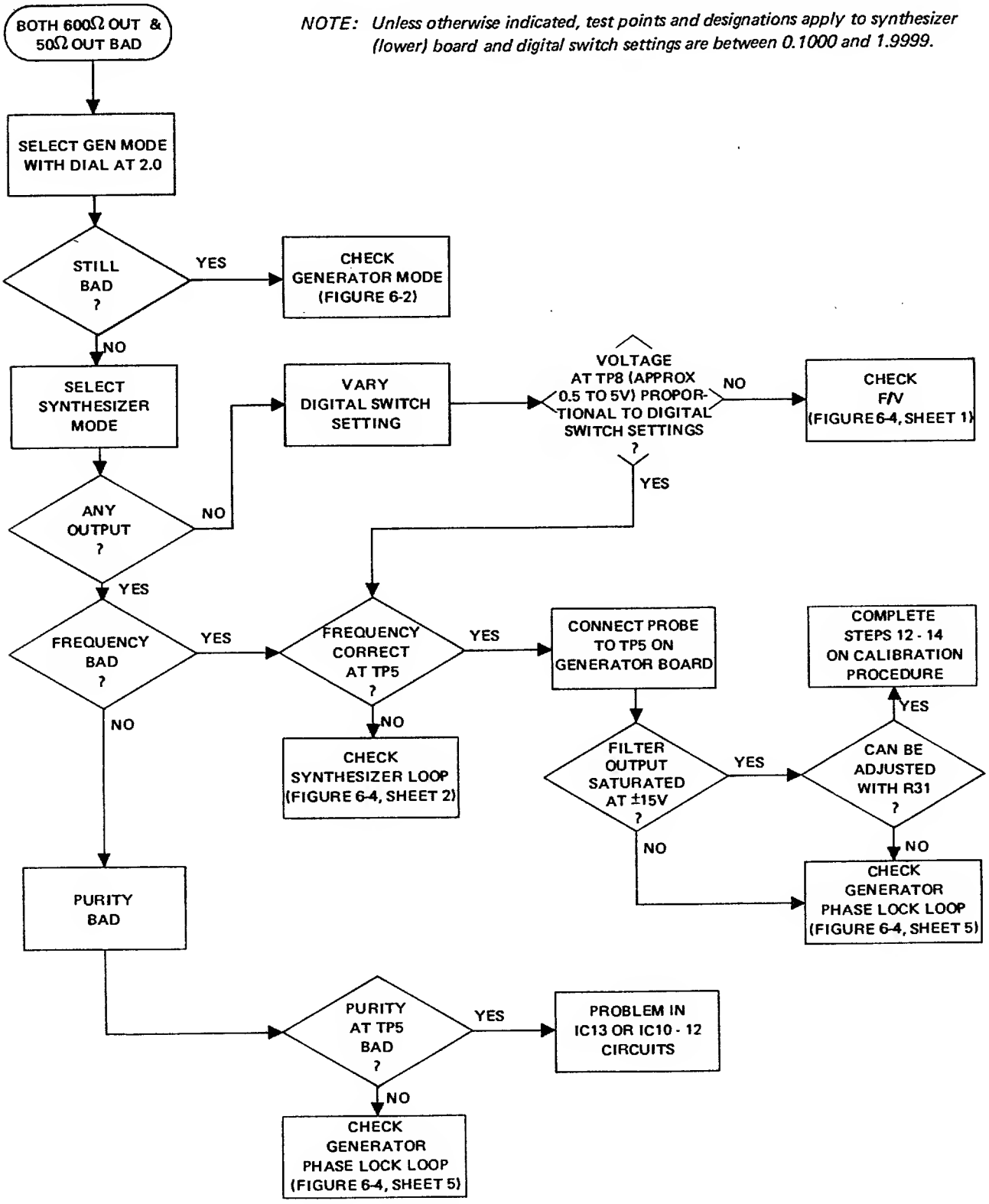


Figure 6-1. Initial Checks

*NOTE: Unless otherwise indicated, test points and designators apply to generator (upper) board and mode selector is in generator mode.*

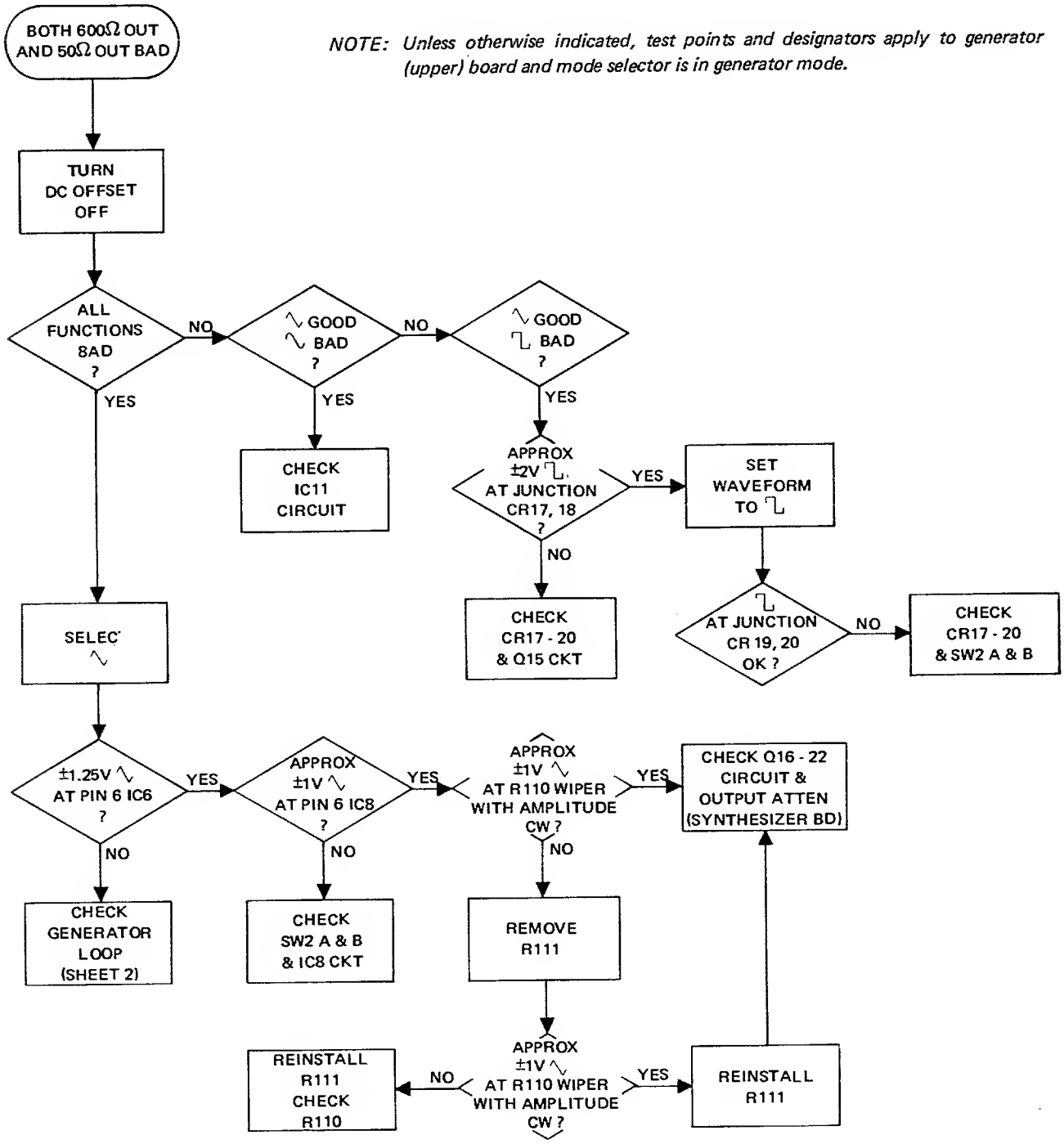


Figure 6-2. Generator Mode Checks (Sheet 1 of 3)

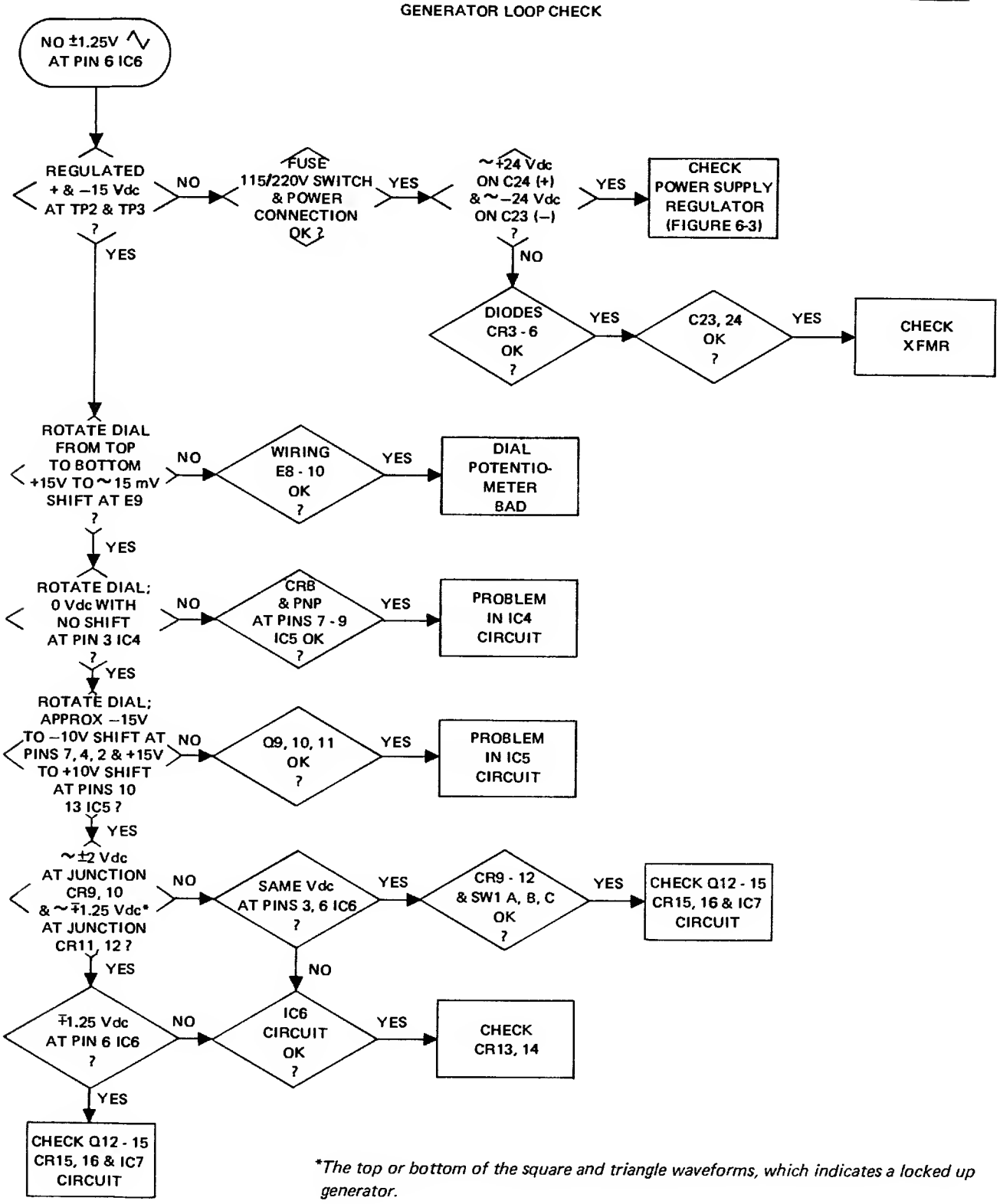


**The top or bottom of the square and triangle waveforms, which indicates a locked up generator.*

Figure 6-2. Generator Mode Checks (Sheet 2 of 3)

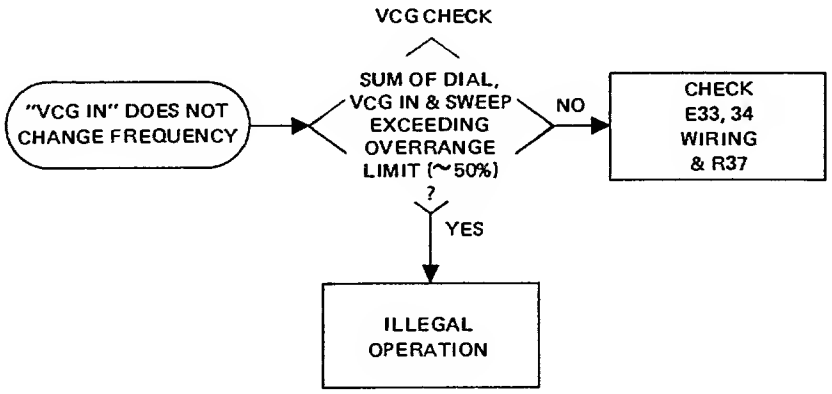


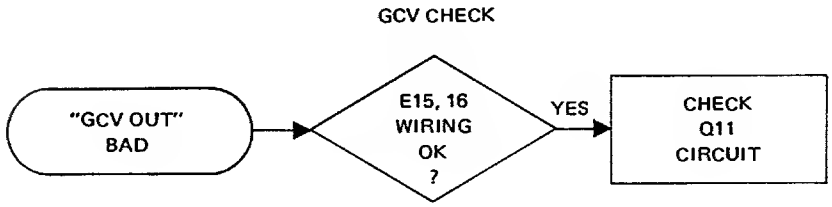


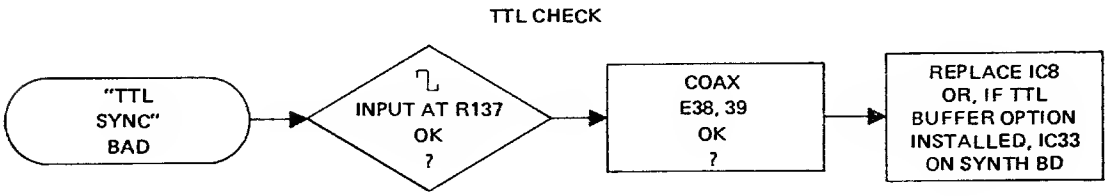


Figure 6-2. Generator Mode Checks (Sheet 3 of 3)

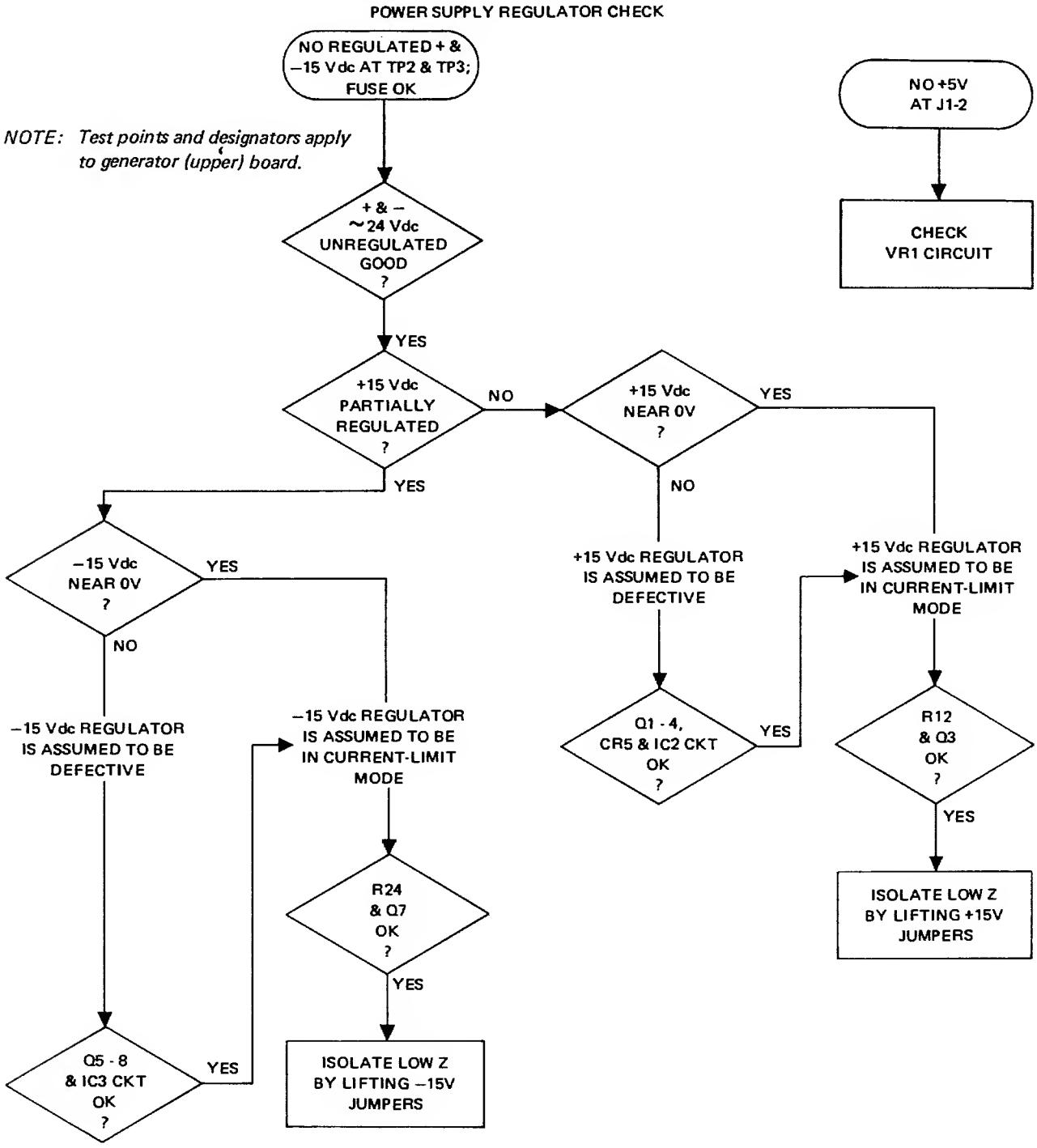


Figure 6-3. Power Supply Checks

*NOTE: Unless otherwise indicated, test points and designations apply to synthesizer (lower) board and digital switch settings are between 0.1000 and 1.9999.*

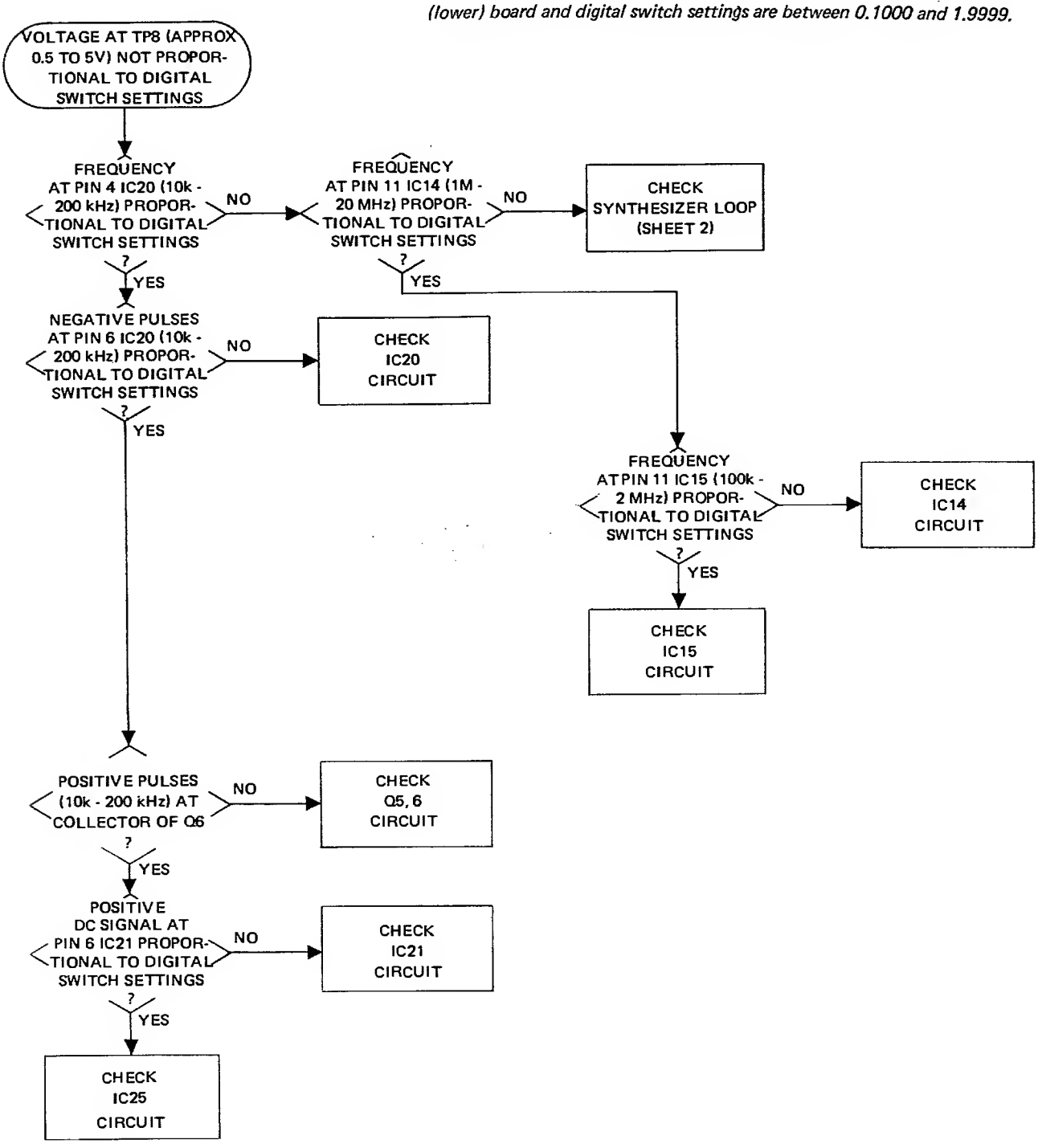


Figure 6-4. Synthesizer Mode Checks (Sheet 1 of 6)

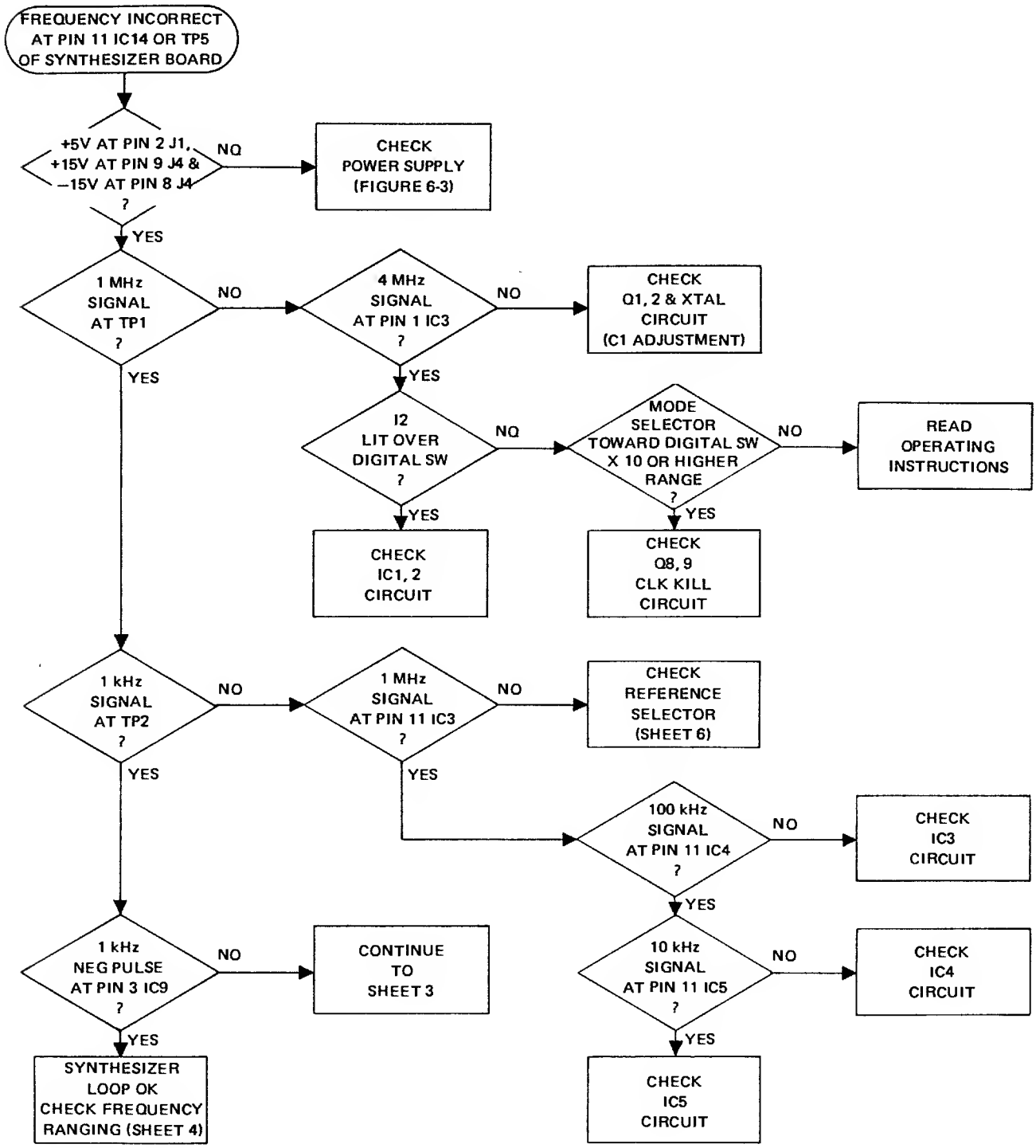


Figure 6-4. Synthesizer Mode Checks (Sheet 2 of 6)

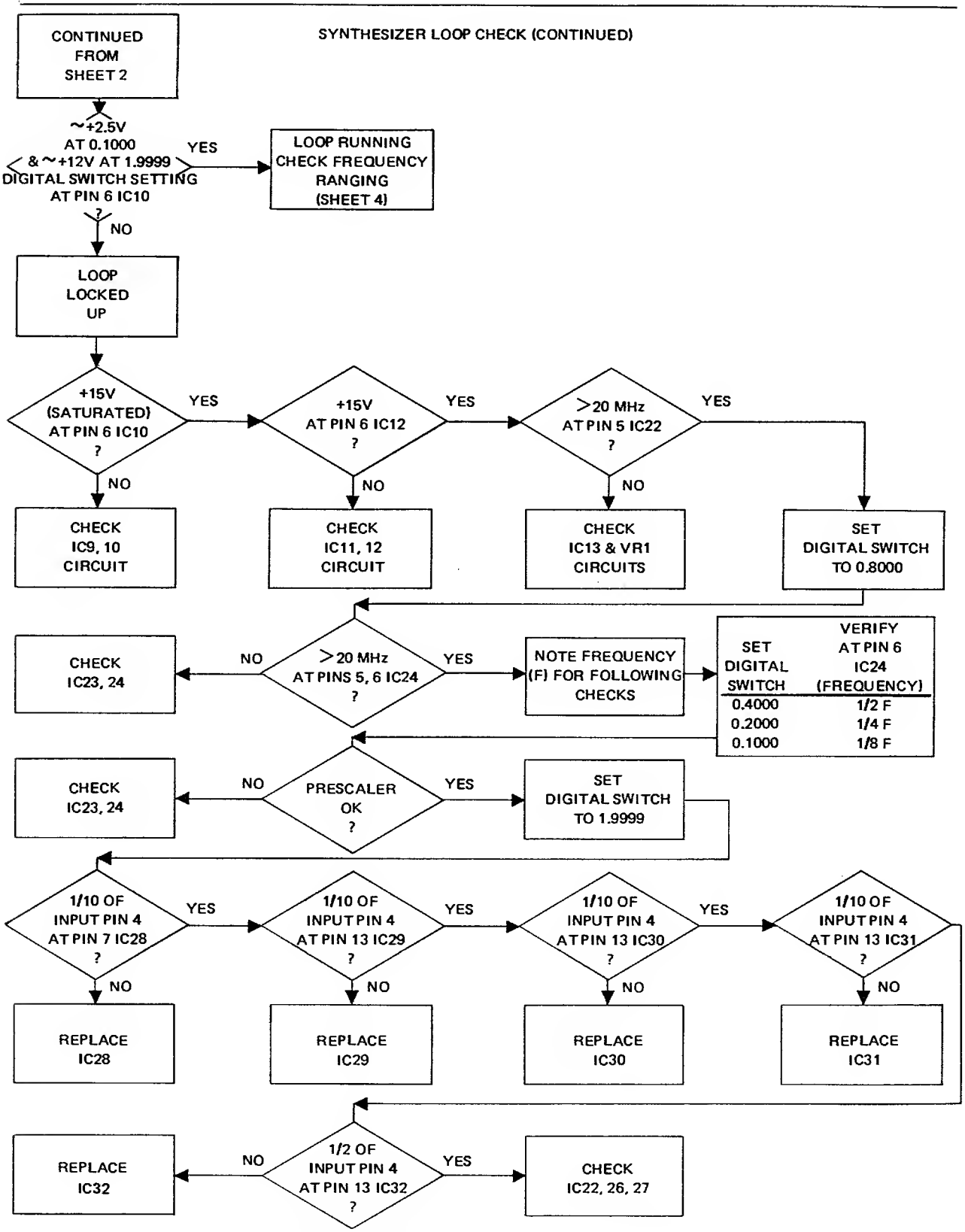


Figure 6-4. Synthesizer Mode Checks (Sheet 3 of 6)

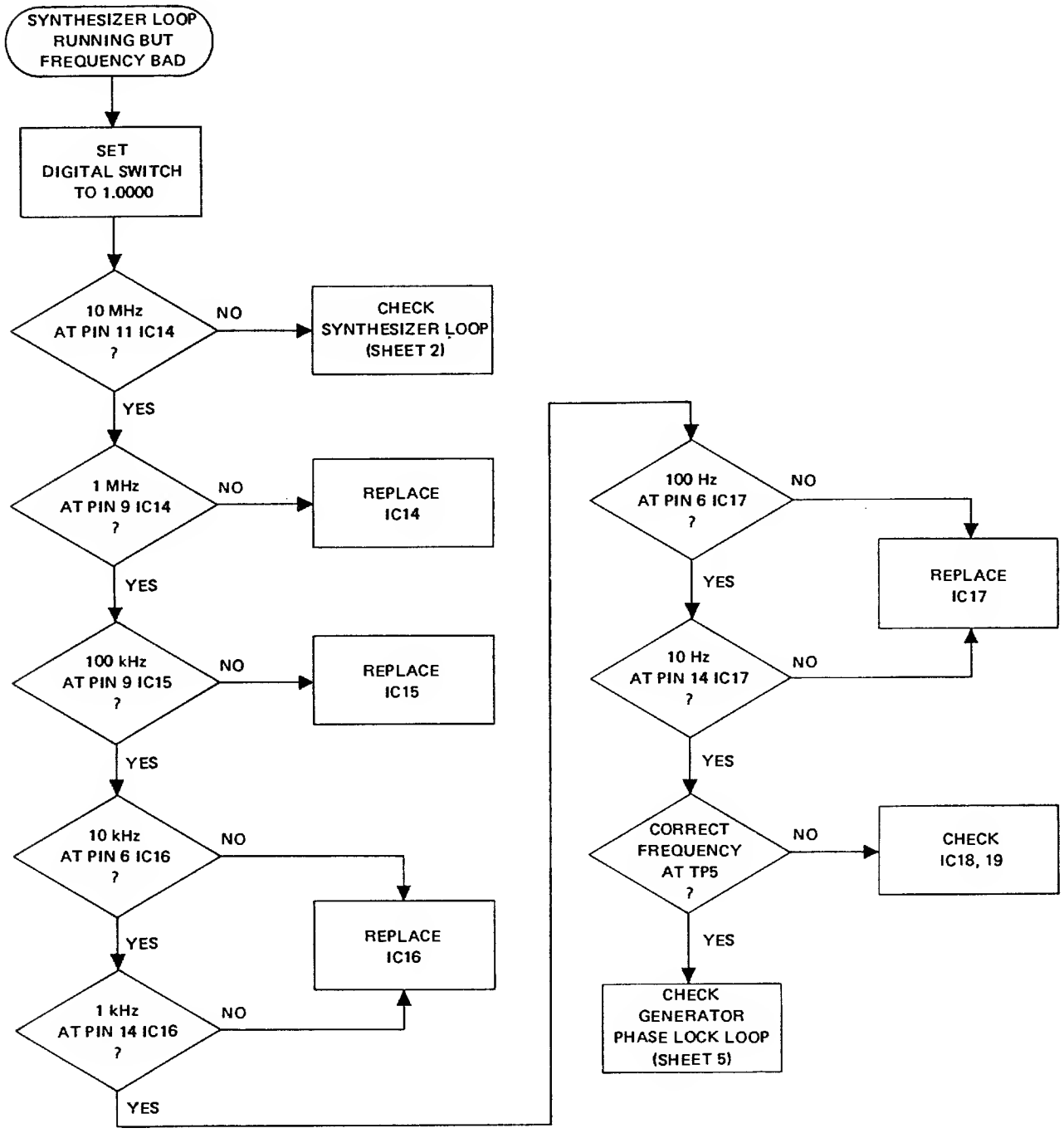


Figure 6-4. Synthesizer Mode Checks (Sheet 4 of 6)

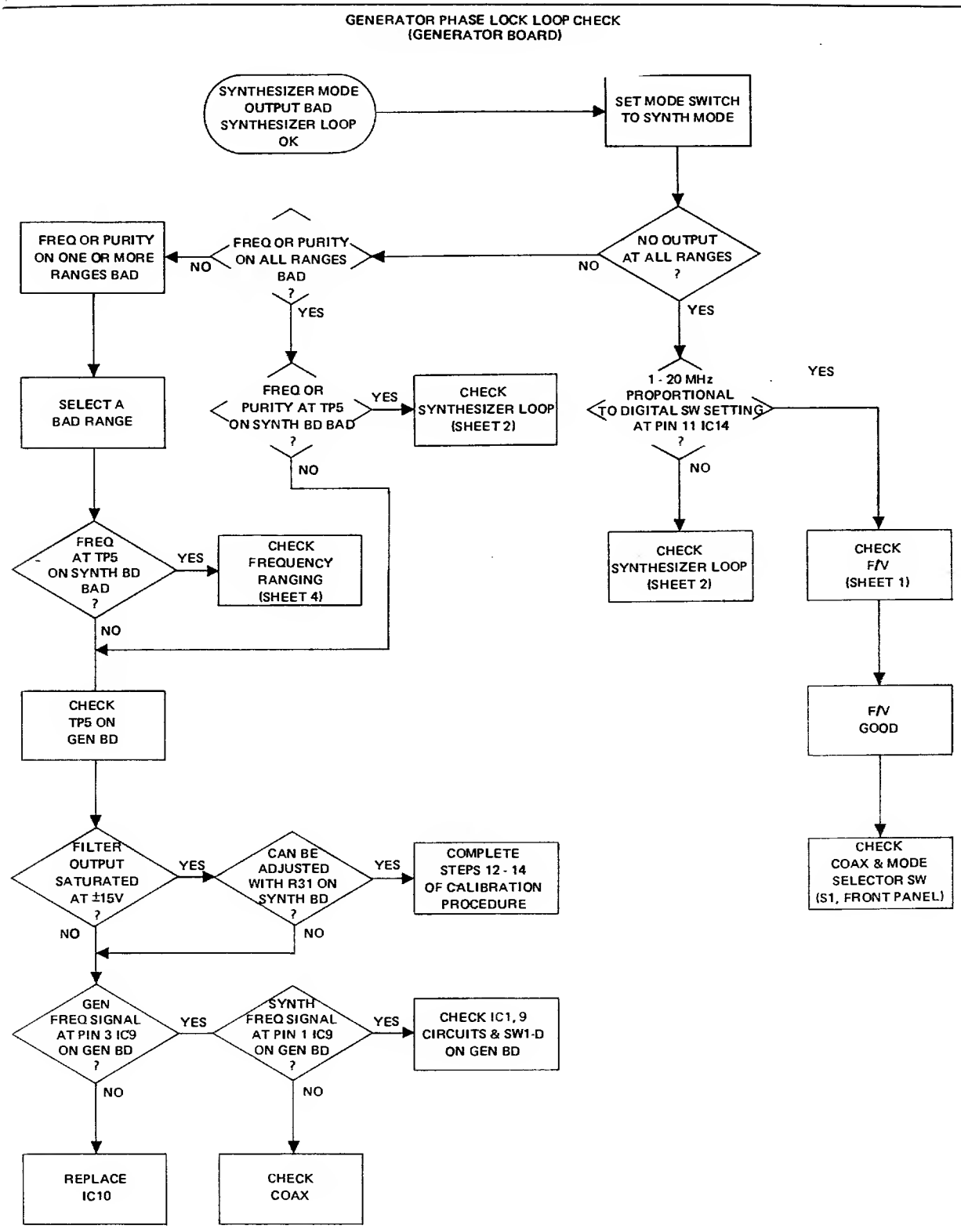


Figure 6-4. Synthesizer Mode Checks (Sheet 5 of 6)

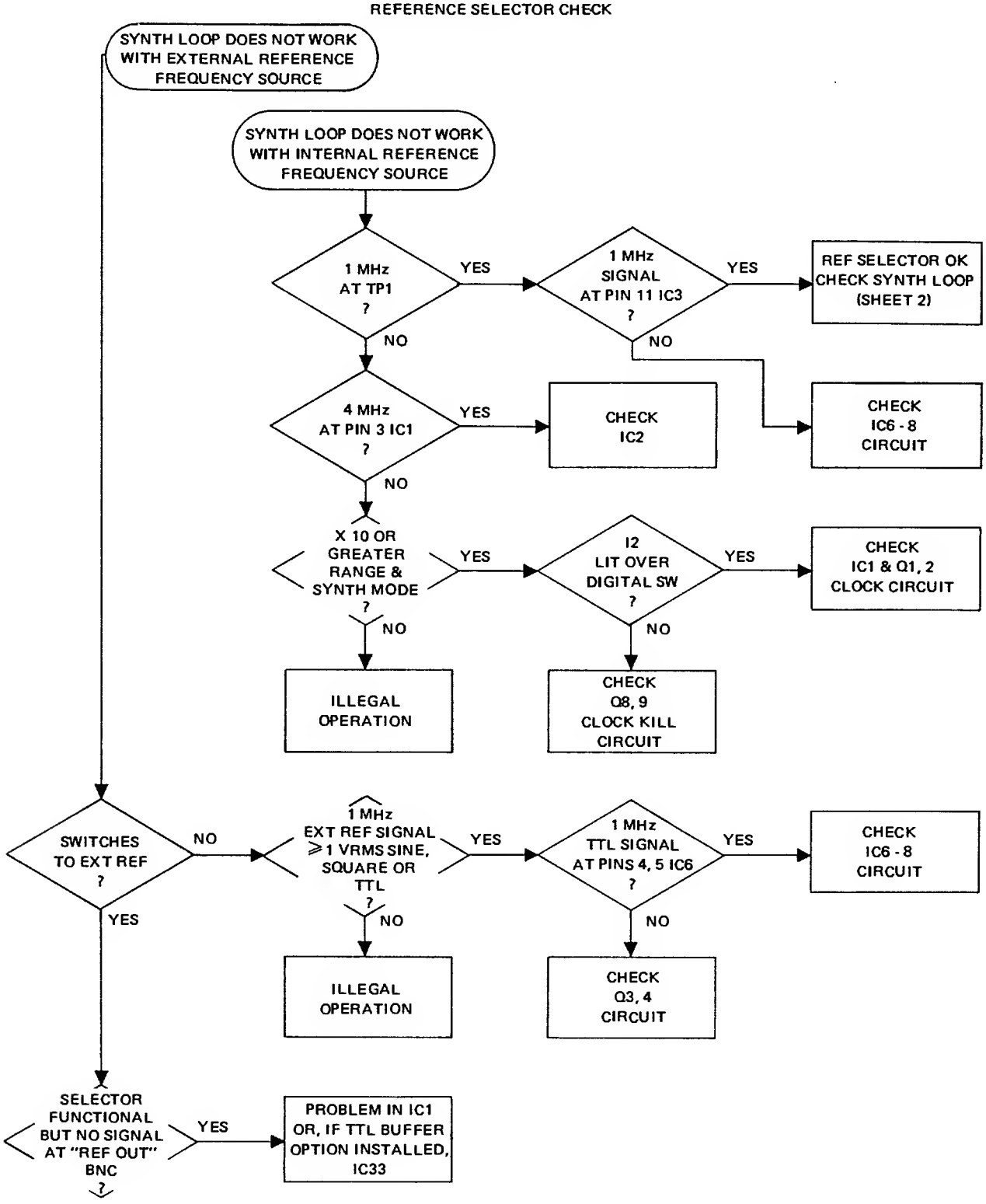


Figure 6-4. Synthesizer Mode Checks (Sheet 6 of 6)

# SECTION 7
# PARTS AND SCHEMATICS

## 7.1 DRAWINGS

The following assembly drawings (with parts lists) and schematics are in the arrangement shown below.

## 7.2 ORDERING PARTS

When ordering spare parts, please specify part number, circuit reference, board, serial number of unit and, if applicable, the function performed.

## 7.3 ADDENDA

Under Wavetek's product improvement program, the latest electronic designs and circuits are incorporated into each Wavetek instrument as quickly as development and testing permit. Because of the time needed to compose and print instruction manuals, it is not always possible to include the most recent changes in the initial printing. Whenever this occurs, addendum pages are prepared to summarize the changes made and are inserted immediately inside the rear cover. If no such pages exist, the manual is correct as printed.


| | Page No. |
|---|---|
| CHASSIS | |
| Assembly Drawing | 7-2 |
| Schematic | 7-3 |
| Parts List | 7-4 |
| MAIN BOARD | |
| Assembly Drawing | 7-6 |
| Schematic | 7-7 |
| Parts List | 7-8 |
| SYNTHESIZER BOARD | |
| Assembly Drawing | 7-10 |
| Schematic | 7-11 |
| Parts List | 7-12 |

THIS DOCUMENT CONTAINS PROPRIETARY INFORMATION AND DESIGN RIGHTS BELONGING TO WAVETEK AND MAY NOT BE REPRODUCED FOR ANY REASON EXCEPT CALIBRATION, OPERATION, AND MAINTENANCE WITHOUT WRITTEN AUTHORIZATION.

| REV | ECN | BY | DATE | APP |
|---|---|---|---|---|
| A | ECN 1603 | RO | 10-10-77 | |
| B | ECN 1808 | JRM | 9-19-8 | |
| C | ECN 2467 | LDU | 11-4-8 | |

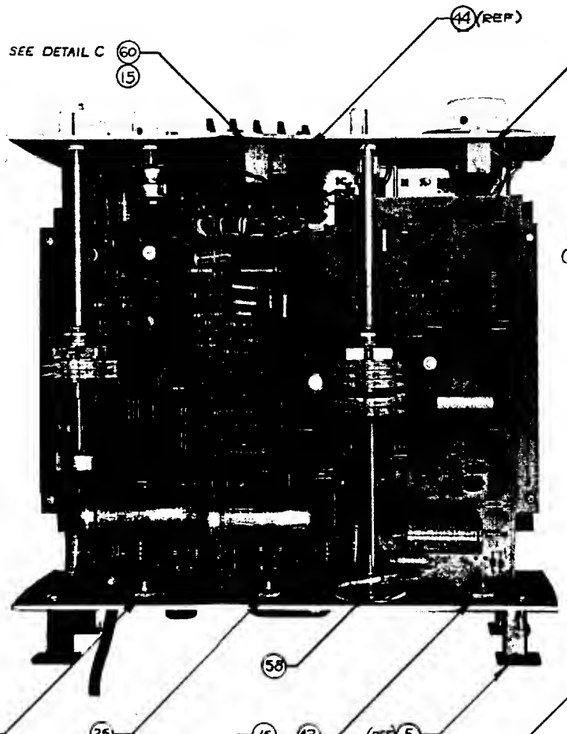


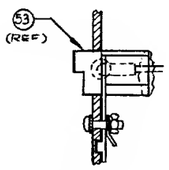


DETAIL A

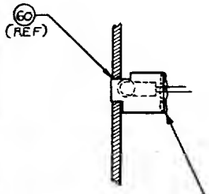


DETAIL C
INSTALL WITH RTV

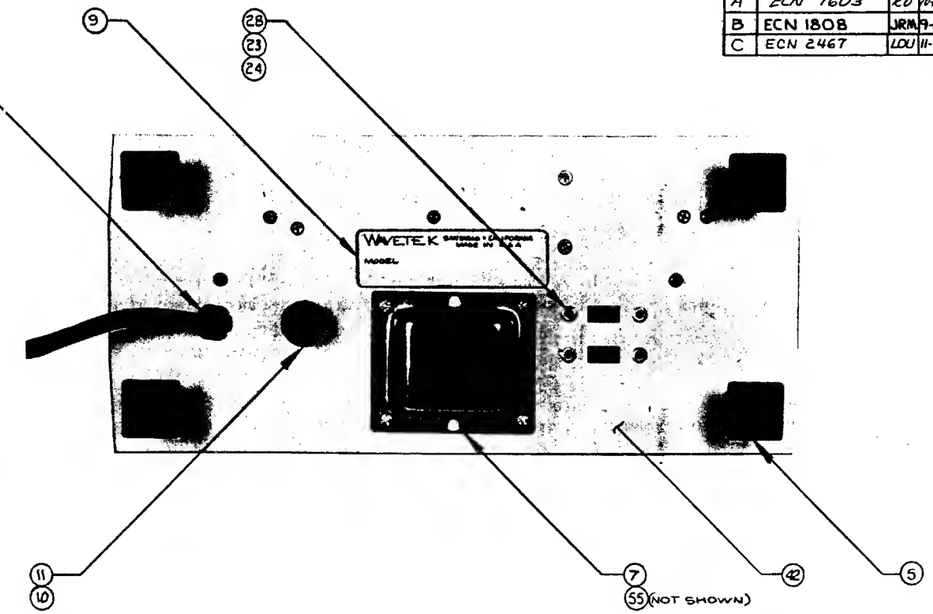


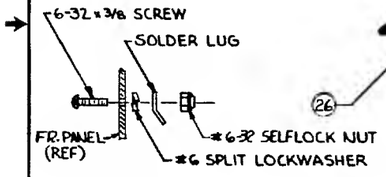


DETAIL B

HARDWARE STACK UP FOR GROUND LUG (TYP 3 PLACES)

NOTE: ALL CONNECTIONS TO BE MECHANICALLY SECURE TO LUGS PRIOR TO SOLDERING GROUND WIRES.

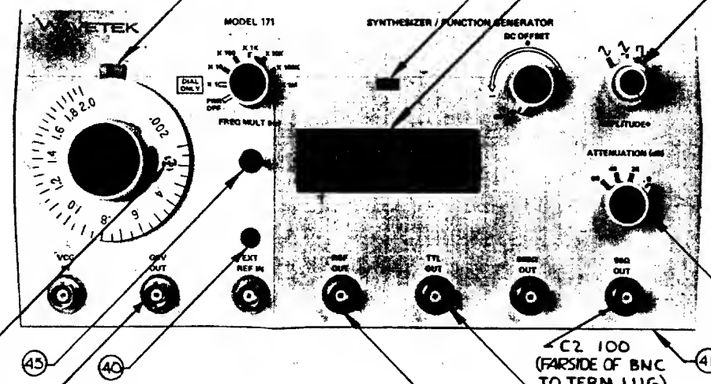


SEE DETAIL B (SAFETY GND FARSIDE)

C3 .01 (FARSIDE OF BNC TO TERM LUG)

C2 100 (FARSIDE OF BNC TO TERM LUG)

(16) (7) (18) (2)

(16) (REF) (18) (REF) (59)

NOTE UNLESS OTHERWISE SPECIFIED

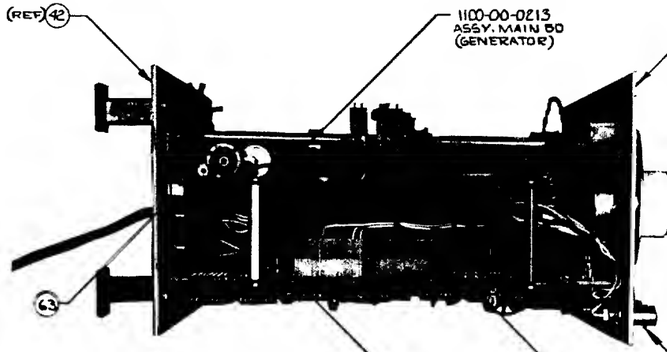


1100-00-0225
ASSY, SYNTHESIZER

(50) (51)

(16) (REF) (18) (14) (19) (7)

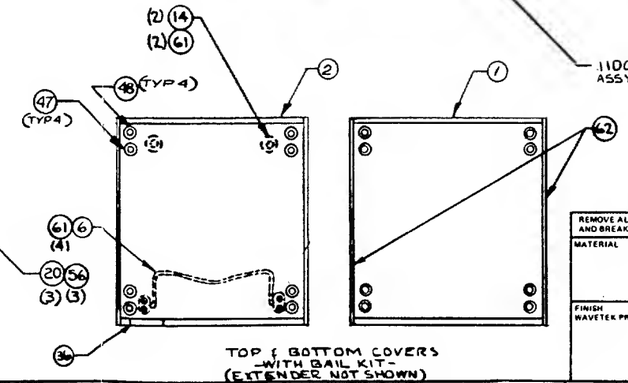


TOP & BOTTOM COVERS -WITH BAIL KIT- (EXTENDER NOT SHOWN)

| | | | |
|---|---|---|---|
| REMOVE ALL BURRS AND BREAK SHARP EDGES | DRAWN RO | DATE 9/19/76 | WAVETEK SAN DIEGO · CALIFORNIA |
| MATERIAL | PROJ ENGR T.O. | | TITLE ASSEMBLY CHASSIS |
| FINISH WAVETEK PROCESS | RELEASE APPROV [illegible] | 4/20/76 | TOLERANCE UNLESS OTHERWISE SPECIFIED .XXX .010 ANGLES 1 .XX .030 |
| | DO NOT SCALE DWG | | MODEL NO 171 |
| | SCALE | | DWG NO. 0102-00-0510 REV C |
| | | | CODE IDENT 23338 SHEET 1 OF 1 |

THIS DOCUMENT CONTAINS PROPRIETARY INFORMATION AND DESIGN RIGHTS BELONGING TO WAVETEK AND MAY NOT BE REPRODUCED FOR ANY REASON EXCEPT CALIBRATION, OPERATION, AND MAINTENANCE WITHOUT WRITTEN AUTHORIZATION.

| REV | ECN | BY | DATE | APP |
|---|---|---|---|---|
| A | ECN 1542 | RO | 5-16-74 | |
| B | ECN 1808 | JRM | 9-19-8 | |

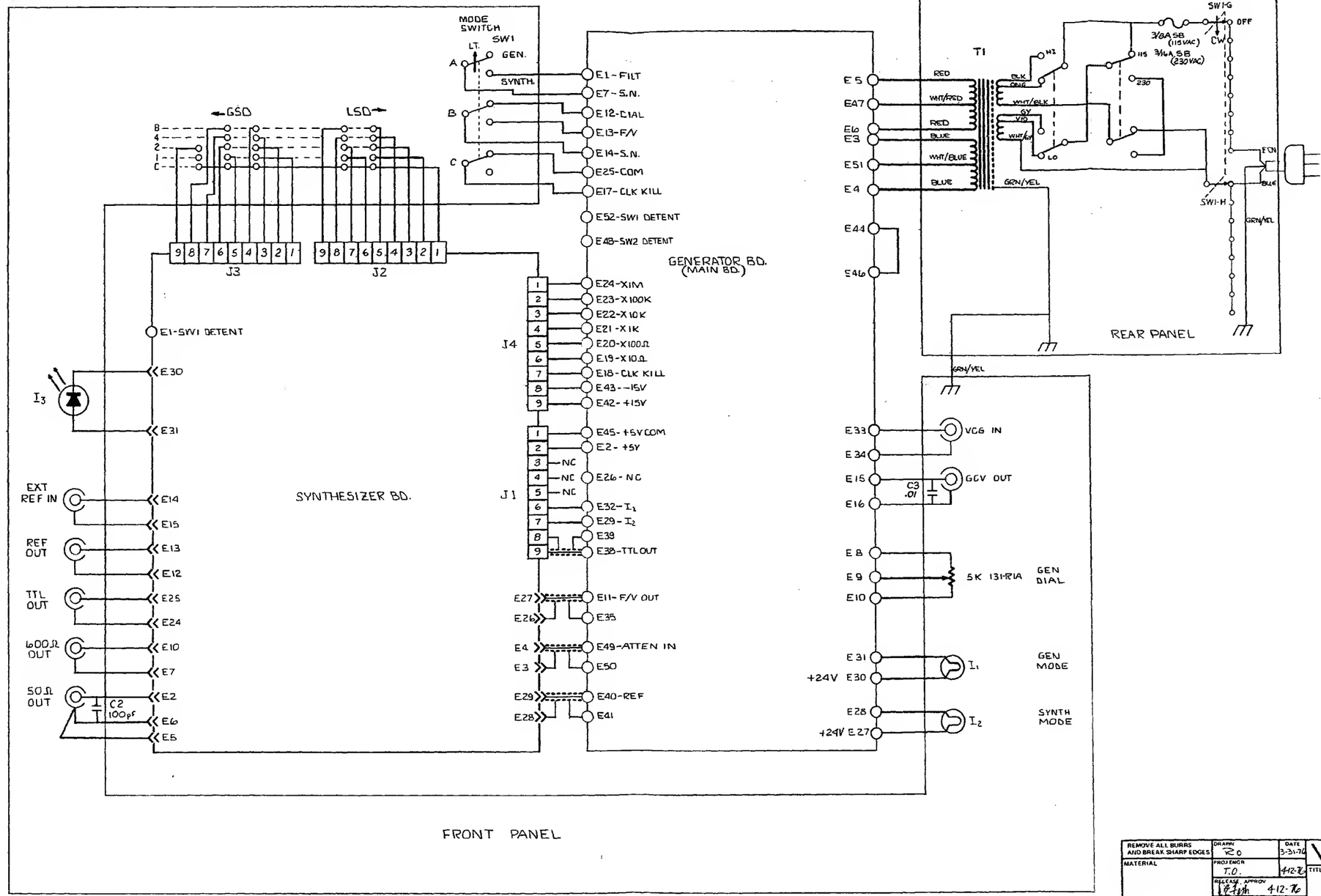


NOTE: UNLESS OTHERWISE SPECIFIED

| | | | |
|---|---|---|---|
| REMOVE ALL BURRS AND BREAK SHARP EDGES | DRAWN RO | DATE 3-31-76 | WAVETEK SAN DIEGO • CALIFORNIA |
| MATERIAL | PROJ ENGR T.O. | 4-12-76 | TITLE CHASSIS SCHEMATIC (INSTRUMENT) |
| FINISH WAVETEK PROCESS | RELEASE APPROV | 4-12-76 | |
| | TOLERANCE UNLESS OTHERWISE SPECIFIED .XXX ±.010 ANGLES ±1° .XX ±.030 | | |
| | DO NOT SCALE DWG | | MODEL NO. 171 / DWG NO. 0004-00-0095 / REV B |
| | SCALE | | CODE IDENT. 23338 / SHEET 1 OF 1 |

THIS DOCUMENT CONTAINS PROPRIETARY INFORMATION AND DESIGN RIGHTS BELONGING TO WAVETEK AND MAY NOT BE REPRODUCED FOR ANY REASON EXCEPT CALIBRATION, OPERATION, AND MAINTENANCE WITHOUT WRITTEN AUTHORIZATION.

| REV | ECN | BY | DATE | APP |
|---|---|---|---|---|

| REFERENCE DESIGNATONS | PART DESCRIPTION | ORIG-MFGR-PART-NO | MFGR | WAVETEK NO. | QTY/PT |
|---|---|---|---|---|---|
| NONE | ASSY DRWG,CHASSIS | 0102-00-0510 | WVTK | 0102-00-0510 | 1 |
| NONE | DIAL ASSY | 180-027 | WVTK | 1201-00-0027 | 1 |
| 55 | TRANSFORMER | 171-886 | WVTK | 1204-00-0486 | 1 |
| 7 | END BELL | 110-333 | WVTK | 1400-00-0174 | 1 |
| 63 | SPACER | 8480 | WVTK | 1400-00-0653 | 2 |
| 36 | PLATE,NAME | 139-305 | WVTK | 1400-00-2180 | 1 |
| 53 | INDICATON,DIAL | 180-303 | WVTK | 1400-00-4970 | 1 |
| 1 | COVER,TOP | 180-300-1 | WVTK | 1400-00-5000 | 1 |
| 62 | EXPANDER | 180-301 | WVTK | 1400-00-5010 | 2 |
| 5 | POST | 180-302 | WVTK | 1400-00-5020 | 4 |
| 2 | COVER,BOTTOM | 180-300-2 | WVTK | 1400-00-5030 | 1 |
| 57 | CORD HOLDER | 1400-00-5409 | WVTK | 1400-00-5409 | 1 |
| 41 | PANEL,FT | 1400-00-5740 | WVTK | 1400-00-5740 | 1 |
| 42 | PANEL,REAR,ANO | 1400-00-5753 | WVTK | 1400-00-5753 | 1 |
| 60 | INDICATOR FROM:1400-00-4970 | 1400-00-5769 | WVTK | 1400-00-5769 | 1 |
| 9 | I.D. LABEL | 1400-00-9110 | WVTK | 1400-00-9110 | 1 |
| C2 | CAP,CER,100PF,1KV | DD-101 | CPL | 1500-01-0111 | 1 |

| WAVETEK PARTS LIST | TITLE CHASSIS | ASSEMBLY NO. 1101-00-0510 | REV E |
|---|---|---|---|
| | | PAGE: 1 | |

| REFERENCE DESIGNATONS | PART DESCRIPTION | ORIG-MFGR-PART-NO | MFGR | WAVETEK NO. | QTY/PT |
|---|---|---|---|---|---|
| 61 | SPEEDNUT,SELF RETAIN | C7494-632-4 | TINN | 2800-09-0003 | 6 |
| 14 | FAST,CHASSIS | 1591-C11 | USECO | 2800-09-0022 | 2 |
| 18 | WASHER,SHOULDER | 2668 | SMITH | 2800-27-0004 | 14 |
| 12 | STRAIN RELIEF BUSH | SR6M-1 | HEYCO | 2800-37-0003 | 1 |
| 59 | FERRITE BEAD | 56-590-65/3B | FERRX | 3100-00-0001 | 1 |
| 40 | LED | TIL-220 | TI | 4899-00-0006 | 1 |
| 58 | WAFER FROM:5104-02-0007 | 5104-98-0001 | WVTK | 5104-98-0001 | 2 |
| 28 | SW ASSY SLIDE HI-LO | SW422-FT-HK | UIO | 5105-00-0001 | 1 |
| 23 | SWITCH ASSY SLIDE | 46256-LF | SWCFT | 5105-00-0002 | 1 |
| 24 | SOLDER GUARD | 46256-LF-SG | SWCFT | 5105-09-0001 | 2 |
| 45 | SWITCH,TOGGLE | 7301P3D2A | CAR | 5106-00-0018 | 1 |
| 44 | SWITCH | 28-W-62-C | OIGTN | 5107-00-0006 | 1 |
| 29 | PWR CORD | 0-7789-008-GY | PACRO | 6001-80-0004 | 1 |

| WAVETEK PARTS LIST | TITLE CHASSIS | ASSEMBLY NO. 1101-00-0510 | REV E |
|---|---|---|---|
| | | PAGE: 3 | |

| REFERENCE DESIGNATONS | PART DESCRIPTION | ORIG-MFGR-PART-NO | MFGR | WAVETEK NO. | QTY/PT |
|---|---|---|---|---|---|
| C3 | CAP,CER,.01MF,50V | CK-105 LONG LEAD | CPL | 1500-01-0300 | 1 |
| 16 | BNC CONN | RC-7946 | KING | 2100-01-0002 | 7 |
| 50 | CONN,9PIN | 09-50-7091 | MOLEX | 2100-02-0051 | 4 |
| 19 | SOLDER LUG | 1497 | SMITH | 2100-08-0012 | 7 |
| NONE | SOLDER LUG | 1485-6 | SMITH | 2100-08-0025 | 3 |
| 51 | PIN | 08-50-0105 | MOLEX | 2100-05-0025 | 58 |
| 20 | SIO KNOB | RB-67-1-SB-M | ROGAN | 2400-01-0008 | 3 |
| 21 | COAX KNUB SET | RB-67-1-SB+0-M-9 | ROGAN | 2400-01-0009 | 1 |
| 15 | LAMP | CM7-7876 | CHMIN | 2400-02-0013 | 2 |
| 10 | FUSE,250V,3/84,3B | 313.375 | LITFU | 2400-05-0009 | 1 |
| 11 | FUSE MOLD | 031.1653/031.1666 | SCHUR | 2400-05-0012 | 1 |
| 56 | BUSHING NYLINEW | 812FF | THOMN | 2800-01-0002 | 4 |
| 47 | STANDOFF,MALE/FEMALE .750 H,.250 HEX, 4-40 | 1203-M03-F05-440 | UNICP | 2800-02-0009 | 4 |
| 48 | STANDOFF,MALE/FEMALE 1.750 H,.250 HEX 8-32 | 1475-M03-F05-832 | UNICP | 2800-02-0010 | 4 |
| 6 | BAIL ASSY W/FT | 180-500 | WVTK | 2800-08-0010 | 1 |

| WAVETEK PARTS LIST | TITLE CHASSIS | ASSEMBLY NO. 1101-00-0510 | REV E |
|---|---|---|---|
| | | PAGE: 2 | |

NOTE: UNLESS OTHERWISE SPECIFIED

| | | | |
|---|---|---|---|
| REMOVE ALL BURRS AND BREAK SHARP EDGES | DRAWN | DATE | WAVETEK SAN DIEGO - CALIFORNIA |
| MATERIAL | PROJ ENGR | | TITLE: CHASSIS |
| | RELEASE APPROV | | |
| FINISH WAVETEK PROCESS | TOLERANCE UNLESS OTHERWISE SPECIFIED XXX ±.010 ANGLES ±1 XX ±.030 | | |
| | DO NOT SCALE DWG | | MODEL NO 171 / DWG NO 1101-00-0510 / REV E |
| | SCALE | | CODE IDENT 23338 / SHEET 1 OF 1 |

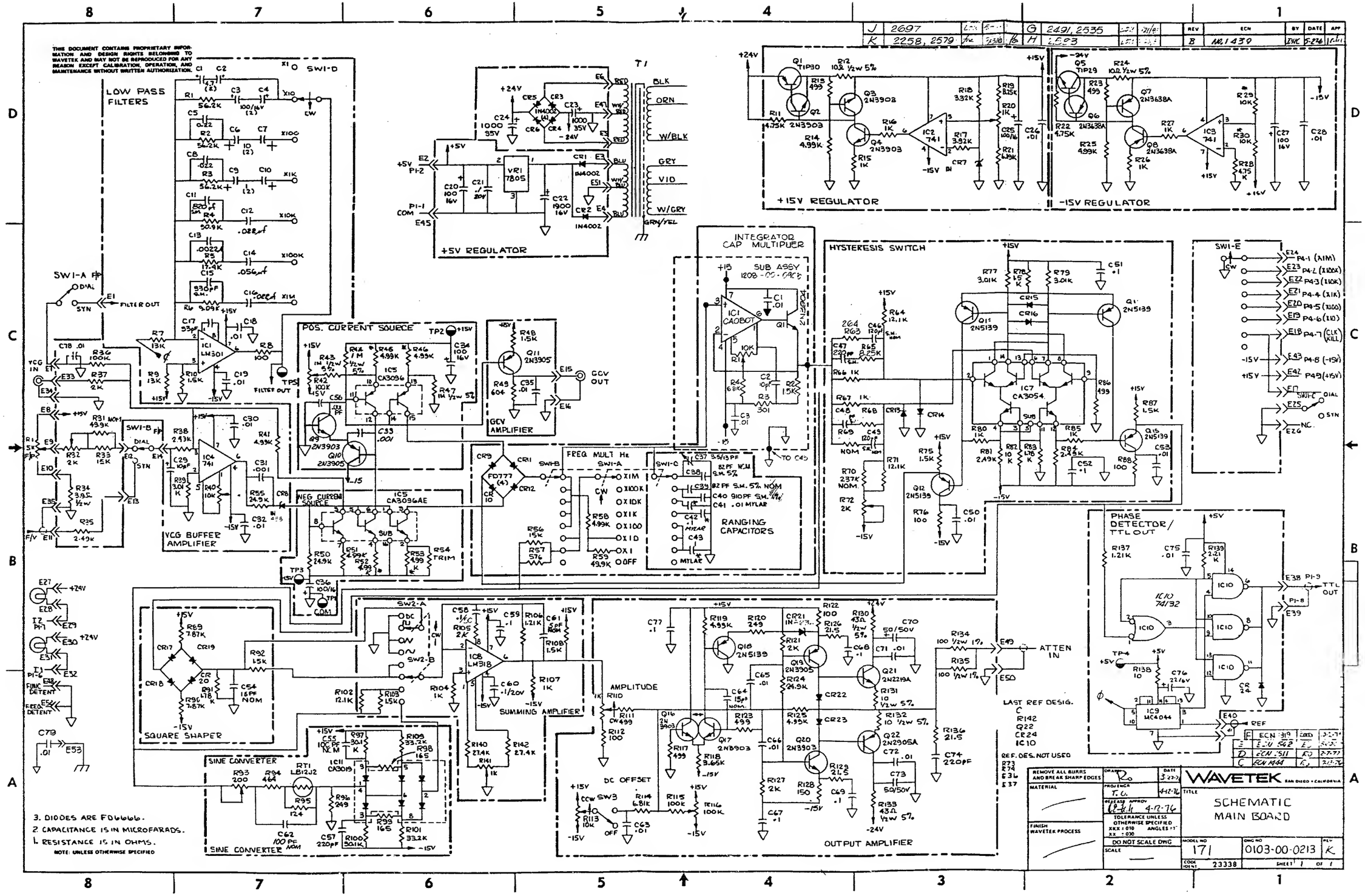
THIS DOCUMENT CONTAINS PROPRIETARY INFORMATION AND DESIGN RIGHTS BELONGING TO WAVETEK AND MAY NOT BE REPRODUCED FOR ANY REASON EXCEPT CALIBRATION, OPERATION, AND MAINTENANCE WITHOUT WRITTEN AUTHORIZATION.
LOW PASS FILTERS
+5V REGULATOR
+15V REGULATOR
-15V REGULATOR
INTEGRATOR CAP MULTIPLIER
SUB ASSY 1208-00-0406
HYSTERESIS SWITCH
POS. CURRENT SOURCE
GCV AMPLIFIER
VCG BUFFER AMPLIFIER
NEG CURRENT SOURCE
FREQ MULT Hz
RANGING CAPACITORS
PHASE DETECTOR/ TTL OUT
SQUARE SHAPER
SUMMING AMPLIFIER
SINE CONVERTER
AMPLITUDE
DC OFFSET
OUTPUT AMPLIFIER
ATTEN IN
LAST REF DESIG. C R142 Q22 CR24 IC10
REF. DES. NOT USED R73 R74 E36 E37
3. DIODES ARE FD6666.
2. CAPACITANCE IS IN MICROFARADS.
1. RESISTANCE IS IN OHMS.
NOTE: UNLESS OTHERWISE SPECIFIED
REMOVE ALL BURRS AND BREAK SHARP EDGES
MATERIAL
FINISH WAVETEK PROCESS
DRAWN
DATE 3-22-76
PROJ ENGR T. G.
4-12-76
RELEASE APPROV
4-12-76
TOLERANCE UNLESS OTHERWISE SPECIFIED XXX ± .010 XX ± .030 ANGLES ±1°
DO NOT SCALE DWG
SCALE
WAVETEK SAN DIEGO • CALIFORNIA
TITLE SCHEMATIC MAIN BOARD
MODEL NO 171
DWG NO 0103-00-0213
REV K
CODE IDENT 23338
SHEET 1 OF 1

| REV | ECN | BY | DATE | APPR. |
|---|---|---|---|---|
| B | ECN 1521 | RD | 2-8-77 | |
| C | ECN 819 | RD | 10-2-78 | |
| D | ECN 2467 | LOU | 11-4-80 | KDJC |
| E | 2593 | LOU | 2-2-81 | KDJC |

+5V REGULATOR

-15V REGULATOR

+15V REGULATOR

HYSTERESIS SWITCH

TTL OUT

PHASE DETECTOR

SQUARE SHAPER

INTEGRATOR/CAP. MULT.

SINE CONVERTER

SUMMING AMP

OUTPUT AMP

LOW PASS FILTERS

VCG BUFFER AMPLIFIER/ GCV AMPLIFIER

REV ASSEMBLY

DRILL AND INSTALL .001 CAP
SCRAPE AWAY SOLDER
RESIST AND SOLDER TO
GROUND PLANE AND
COLLECTOR OF 3903

6101-00-0213

WAVETEK
0101-00-0213E
MAIN BD
MODEL 171

SHEET 1 OF 2
(SHEET 3 IS 'B' SIZE)

| REV | ECN | BY | DATE | APP |
|---|---|---|---|---|

THIS DOCUMENT CONTAINS PROPRIETARY INFORMATION AND DESIGN RIGHTS BELONGING TO WAVETEK AND MAY NOT BE REPRODUCED FOR ANY REASON EXCEPT CALIBRATION, OPERATION, AND MAINTENANCE WITHOUT WRITTEN AUTHORIZATION.

| REFERENCE DESIGNATORS | PART DESCRIPTION | ORIG-MFGR-PART-NO | MFGR | WAVETEK NO. | QTY/PT |
|---|---|---|---|---|---|
| NONE | ASSY DRWG, MAIN | 0101-00-0213 | WVTK | 0101-00-0213 | 1 |
| NONE | SCHEMATIC, MAIN | 0103-00-0213 | WVTK | 0103-00-0213 | 1 |
| NONE | OA DRWG, MAIN | 0107-00-0213 | WVTK | 0107-00-0213 | 1 |
| R60 | PCA, PIGGYBACK BOARD | 171-0908 | WVTK | 1208-00-0908 | 1 |
| 1 | SPACER | B480 | WVTK | 1400-00-0653 | 4 |
| C61T | CAP, CER, 5PF, 1KV | DD-050 | CRL | 1500-00-5011 | 1 |
| C100- C31 C33 | CAP, CER, .001MF, 1KV | DD-102 | ARCO | 1500-01-0211 | 3 |
| C79 | CAP, CER, .01MF, 1KV | GAP-103 | CRL | 1500-01-0309 | 1 |
| C18 C19 C26 C28 C30 C32 C35 C50 C53 C63 C65 C66 C71 C72 C75 C78 | CAP, CER, MN, .01MF, 50V | CAC02Z5U103Z100A | CORNG | 1500-01-0310 | 16 |
| C21 C51 C52 C58 C59 C60 C67 C68 C69 C77 | CAP, CER, MON, .1MF, 50V | CAC03ZU104Z050A | CORNG | 1500-01-0405 | 10 |
| C54T C64T | CAP, CER, 15PF, 1KV | DD-150 | ARCO | 1500-01-5011 | 2 |
| C57 C74 | CAP, CER, 220PF, 1KV | DD-221 | ARCO | 1500-02-2111 | 2 |
| C17 | CAP, CER, 33PF, 1KV | DD-330 | CRL | 1500-03-3011 | 1 |
| C56 | CAP, CER, 330PF, 1KV | DD-331 | ARCO | 1500-03-3111 | 1 |
| C62T | CAP, CER, 82PF, 1KV | DD-820 | CRL | 1500-08-2011 | 1 |
| C46T C49T | CAP, MICA, 120PF, 500V | DM15-121J | ARCO | 1500-11-2100 | 2 |

WAVETEK PARTS LIST | TITLE MAIN | ASSEMBLY NO. 1100-00-0213 | PAGE: 1 | REV L

| REFERENCE DESIGNATORS | PART DESCRIRTION | ORIG-MFGR-PART-NO | MFGR | WAVETEK NO. | QTY/PT |
|---|---|---|---|---|---|
| C1 C2 | CAP, TANT, 4.7MF, 35V | 150D475X9035B2 | SPRAG | 1500-74-7502 | 2 |
| | CAP SET, POLYC MIXED MATCHED SET | 180-501-101 | WVTK | 1509-80-0008 | 1 |
| C41 | CAP, POLYC, .01MF, 100V PART OF 1509-80-0008 QTY(1) | | | | |
| C42 | CAP, POLYC, .1MF, 100V PART OF 1509-80-0008 QTY(1) | | | | |
| C43 | CAP, POLYC, 1MF, 100V PART OF 1509-80-0008 QTY(1) | | | | |
| NONE | MAIN | 1700-00-0213 | WVTK | 1700-00-0213 | 1 |
| 2 | SKT, IC, 14PIN | CB814-01. | TI | 2100-03-0011 | 1 |
| 3 | SKT, IC, 16PIN | 16-DIP | CINCH | 2100-03-0022 | 1 |
| NONE | SOLDER LUG | 1497 | SMITH | 2100-04-0012 | 2 |
| 4 | TERM | 200081 | USECO | 2100-05-0009 | 13 |
| NONE | TERM | 201081 | USECO | 2100-05-0011 | 1 |
| 5 | PIN, MALE | 61182-2 | AMP | 2100-05-0020 | 2 |
| 6 | STANDOFF 1.750 H, .250 HEX 4-40 | P-609-M03-F05-440 | WVTK | 2800-02-0016 | 4 |
| 7 | HEAT SINK | NF-207 | WAKE | 2800-11-0001 | 3 |
| 8 | TRANSIPAD | 10160 | METRS | 2800-11-0004 | 2 |
| R110 | POT, CONT, 1K | 180-401 | WVTK | 4600-01-0207 | 1 |
| R141 R20 | POT, TRIM, 1K | 91AR1K | BECK | 4600-01-0209 | 2 |
| R40 | POT, TRIM, 10K | 91AR10K | BECK | 4600-01-0315 | 1 |
| R116 R42 | POT, TRIM, 100K | 91AR100K | BECK | 4600-01-0402 | 2 |
| R93 | POT, TRIM, 200 | 91AR200 | BECK | 4600-02-0101 | 1 |
| R32 R72 | POT, TRIM, 2K | 91AR2K | BECK | 4600-02-0201 | 2 |
| R113 | POT, SWITCH, 10K | QH-1879 | CTS | 4602-01-0300 | 1 |
| R12 R131 R132 R24 | RES, C, 1/2W, 5%, 10 | RC20GF-100 | STKPL | 4700-25-0100 | 4 |
| R34 | RES, C, 1/2W, 5%, 3.9 | RC20GF-3R9 | STKPL | 4700-25-0399 | 1 |
| R130 R133 | RES, C, 1/2W, 5%, 43 | RC20GF-430 | STKPL | 4700-25-0430 | 2 |
| R43 R44 R47 | RES, C, 1/2W, 5%, 1M | RC20GF-105 | STKPL | 4700-25-1004 | 3 |
| R112 R122 R76 R8 R88 | RES, MF, 1/8W, 1%, 100 | RN55D-1000F | TRW | 4701-03-1000 | 5 |
| R104 R107 R15 R16 R26 R27 R66 R67 R80 R85 | RES, MF, 1/8W, 1%, 1K | RN55D-1001F | TRW | 4701-03-1001 | 10 |
| R82 | RES, MF, 1/8W, 1%, 10K | RN55D-1002F | TRW | 4701-03-1002 | 1 |

WAVETEK PARTS LIST | TITLE MAIN | ASSEMBLY NO. 1100-00-0213 | PAGE: 3 | REV L

| REFERENCE DESIGNATORS | PART DESCRIPTION | ORIG-MFGR-PART-NO | MFGR | WAVETEK NO. | QTY/PT |
|---|---|---|---|---|---|
| R115 R36 | RES, MF, 1/8W, 1%, 100K | RN55D-1003F | TRW | 4701-03-1003 | 2 |
| R138 | RES, MF, 1/8W, 1%, 10 | RN55D-10R0F | TRW | 4701-03-1009 | 1 |
| R106 R137 | RES, MF, 1/8W, 1%, 1.21K | RN55D-1211F | TRW | 4701-03-1211 | 2 |
| R102 R64 R71 | RES, MF, 1/8W, 1%, 12.1K | RN55D-1212F | TRW | 4701-03-1212 | 3 |
| R95 | RES, MF, 1/8W, 1%, 124 | RN55D-1240F | TRW | 4701-03-1240 | 1 |
| R7 R9 | RES, MF, 1/8W, 1%, 13K | RN55D-1302F | TRW | 4701-03-1302 | 2 |
| R128 | RES, MF, 1/8W, 1%, 150 | RN55D-1500F | TRW | 4701-03-1500 | 1 |
| R10 R103 R108 R48 R75 R78 R87 R92 | RES, MF, 1/8W, 1%, 1.5K | RN55D-1501F | TRW | 4701-03-1501 | 8 |
| R33 R56 | RES, MF, 1/8W, 1%, 15K | RN55D-1502F | TRW | 4701-03-1502 | 2 |
| R98 R99 | RES, MF, 1/8W, 1%, 165 | RN55D-1650F | TRW | 4701-03-1650 | 2 |
| R5 | RES, MF, 1/8W, 1%, 17.4K | RN55D-1742F | TRW | 4701-03-1742 | 1 |
| R83 R91 | RES, MF, 1/8W, 1%, 1.78K | RN55D-1781F | TRW | 4701-03-1781 | 2 |
| R105 R121 R127 R37 | RES, MF, 1/8W, 1%, 2K | RN55D-2001F | TRW | 4701-03-2001 | 4 |
| R126 R129 R136 | RES, MF, 1/8W, 1%, 21.5 | RN55D-21R5F | TRW | 4701-03-2159 | 3 |
| R139 | RES, MF, 1/8W, 1%, 2.21K | RN55D-2211F | TRW | 4701-03-2211 | 1 |
| R70 | RES, MF, 1/8W, 1%, 237K | RN55D-2373F | TRW | 4701-03-2373 | 1 |
| R120 R96 | RES, MF, 1/8W, 1%, 249 | RN55D-2490F | TRW | 4701-03-2490 | 2 |

WAVETEK PARTS LIST | TITLE MAIN | ASSEMBLY NO. 1100-00-0213 | PAGE: 5 | REV L

| REFERENCE DESIGNATORS | PART DESCRIPTION | ORIG-MFGR-PART-NO | MFGR | WAVETEK NO. | QTY/PT |
|---|---|---|---|---|---|
| C47 C48 | CAP, MICA, 220PF, 500V | DM15-221J | ARCO | 1500-12-2100 | 2 |
| C15 | CAP, MICA, 330PF, 500V | DM15-331J | ARCO | 1500-13-3100 | 1 |
| C38T C39T | CAP, MICA, 82PF, 500V | DM15-820J | ARCO | 1500-18-2000 | 2 |
| C11 | CAP, MICA, 820PF, 300V | DM15-821F | ARCO | 1500-18-2101 | 1 |
| C40 | CAP, 910PF, 100V, 1% | DM15-911F | ARCO | 1500-19-1101 | 1 |
| C20 C25 C27 C3 C34 C36 C4 | CAP, ELECT, 100MF, 16V | 500D1070016DC7 | SPRAG | 1500-31-0101 | 7 |
| C23 C24 | CAP, ELECT, 1000MF, 35V | 39D10B0350L6 | SPRAG | 1500-31-0212 | 2 |
| C22 | CAP, ELECT, 1900MF, 15V | 39D19B0015CL4 | SPRAG | 1500-31-9201 | 1 |
| C70 C73 | CAP, ELECT, 50MF, 50V | 500D5060050DD7 | SPRAG | 1500-35-0003 | 2 |
| C13 | POLYC, .0022MF, 200V | 192P22292 | SPRAG | 1500-42-2204 | 1 |
| C12 C16 C8 | POLYE, .022MF, 200V | 192P22392 | SPRAG | 1500-42-2304 | 3 |
| C5 | CAP, POLYE, .22MF, 80V | 192P22498 | SPRAG | 1500-42-2403 | 1 |
| C14 | POLY, .056MF, 200V | 192P56392 | SPRAG | 1500-45-6304 | 1 |
| C37 | VARI, 3.5-13PF, 250V | 7S-TRIKO-02 3.5/13PF | TRIKO | 1500-51-3000 | 1 |
| C10 C9 | CAP, TANT, 1MF, 35V | 150D105X9035A2 | SPRAG | 1500-71-0502 | 2 |
| C29 C6 C7 | CAP, TANT, 10MF, 20V | 150D106X9020B2 | SPRAG | 1500-71-0601 | 3 |
| C76 | CAP, TANT, 22MF, 15V | 196D226X9015KA1 | SPRAG | 1500-72-2601 | 1 |

WAVETEK PARTS LIST | TITLE MAIN | ASSEMBLY NO. 1100-00-0213 | PAGE: 2 | REV L

| REFERENCE DESIGNATORS | PART DESCRIPTION | ORIG-MFGR-PART-NO | MFGR | WAVETEK NO. | QTY/PT |
|---|---|---|---|---|---|
| R35 R38 R81 R84 | RES, MF, 1/8W, 1%, 2.49K | RN55D-2491F | TRW | 4701-03-2491 | 4 |
| R124 R50 R55 | RES, MF, 1/8W, 1%, 24.9K | RN55D-2492F | TRW | 4701-03-2492 | 3 |
| R63T | RES, MF, 1/8W, 1%, 274 | RN55D-2740F | TRW | 4701-03-2740 | 1 |
| R140 R142 | RES, MF, 1/8W, 1%, 27.4K | RN55D-2742F | TRW | 4701-03-2742 | 2 |
| R69T | RES, MF, 1/8W, 1%, 301 | RN55D-3010F | TRW | 4701-03-3010 | 1 |
| R39 R77 R79 | RES, MF, 1/8W, 1%, 3.01K | RN55D-3011F | TRW | 4701-03-3011 | 3 |
| P100 R97 | RES, MF, 1/8W, 1%, 30.1K | RN55D-3012F | TRW | 4701-03-3012 | 2 |
| R18 | RES, MF, 1/8W, 1%, 3.32K | RN55D-3321F | TRW | 4701-03-3321 | 1 |
| R101 R109 | RES, MF, 1/8W, 1%, 33.2K | RN55D-3322F | TRW | 4701-03-3322 | 2 |
| R118 | RES, MF, 1/8W, 1%, 3.65K | RN55D-3651F | TRW | 4701-03-3651 | 1 |
| R17 | RES, MF, 1/8W, 1%, 3.92K | RN55D-3921F | TRW | 4701-03-3921 | 1 |
| R94 | RES, MF, 1/8W, 1%, 464 | RN55D-4640F | TRW | 4701-03-4640 | 1 |
| R11 R22 R28 | RES, MF, 1/8W, 1%, 4.75K | RN55D-4751F | TRW | 4701-03-4751 | 3 |
| R111 R117 R123 R13 R23 R86 | RES, MF, 1/8, 1%, 499 | RN55D-4990F | TRW | 4701-03-4990 | 6 |
| R119 R125 R14 R25 R41 R51 R58 | RES, MF, 1/8W, 1%, 4.99K | RN55D-4991F | TRW | 4701-03-4991 | 7 |
| R31T R59 | RES, MF, 1/8W, 1%, 49.9K | RN55D-4992F | TRW | 4701-03-4992 | 2 |

WAVETEK PARTS LIST | TITLE MAIN | ASSEMBLY NO. 1100-00-0213 | PAGE: 6 | REV L

NOTE: UNLESS OTHERWISE SPECIFIED

| | | | |
|---|---|---|---|
| REMOVE ALL BURRS AND BREAK SHARP EDGES | DRAWN | DATE | WAVETEK SAN DIEGO, CALIFORNIA |
| MATERIAL | PROJ ENGR | | TITLE PARTS LIST MAIN BOARD |
| | RELEASE APPROV | | |
| FINISH WAVETEK PROCESS | TOLERANCE UNLESS OTHERWISE SPECIFIED XXX ±.010 ANGLES ±1° XX ±.020 | | MODEL NO. 171 / DWG NO. 1100-00-0213 / REV L |
| | DO NOT SCALE DWG | | CODE IDENT 23338 / SHEET 1 OF 2 |
| | SCALE | | |

THIS DOCUMENT CONTAINS PROPRIETARY INFORMATION AND DESIGN RIGHTS BELONGING TO WAVETEK AND MAY NOT BE REPRODUCED FOR ANY REASON EXCEPT CALIBRATION, OPERATION, AND MAINTENANCE WITHOUT WRITTEN AUTHORIZATION.

| REV | ECN | BY | DATE | APP |
|---|---|---|---|---|

| REFERENCE DESIGNATORS | PART DESCRIPTION | ORIG-MFGR-PART-NO | MFGR | WAVETEK NO. | QTY/PT |
|---|---|---|---|---|---|
| R1 R2 R3 | RES. MF, 1/8W, 1%, 56.2K | RN55D-5622F | TRW | 4701-03-5622 | 3 |
| R57 | RES. MF, 1/8W, 1%, 576 | RN55D-5760F | TRW | 4701-03-5760 | 1 |
| R49 | RES. MF, 1/8W, 1%, 604 | RN55D-6040F | TRW | 4701-03-6040 | 1 |
| R21 | RES. MF, 1/8W, 1%, 6.19K | RN55D-6191F | TRW | 4701-03-6191 | 1 |
| R114 | RES. MF, 1/8W, 1%, 6.81K | RN55D-6811F | TRW | 4701-03-6811 | 1 |
| R89 R90 | RES. MF, 1/8W, 1%, 7.87K | RN55D-7871F | TRW | 4701-03-7871 | 2 |
| R19 R65 R68 | RES. MF, 1/8W, 1%, 8.25K | RN55D-8251F | TRW | 4701-03-8251 | 3 |
| R6 | RES. MF, 1/8W, 1%, 9.09K | RN55D-9091F | TRW | 4701-03-9091 | 1 |
| R4 | RES. MF, 1/8W, 1%, 90.9K | RN550-9092F | TRW | 4701-03-9092 | 1 |
| R134 R135 | RES. MF, 1/2W, 1%, 100 | RN650-1000F | TRW | 4701-23-1000 | 2 |
| R29 R30 | RES. SET, 2-10K, 1/8W QTY: 2: 4701-03-1002 | 142-501-64A | WVTK | 4789-00-0019 | 1 |
| R45 R46 R52 R53 | RES. SET, 4-4.99K, 1/8W QTY: 4: 4701-03-4991 | 180-500-100A | WVTK | 4789-00-0039 | 1 |
| CR21 | DIODE, ZENER 6.2V | 1N823A | NPC | 4801-01-0823 | 1 |
| CR7 CR8 | DIODE | 1N4561 | MICRO | 4801-01-4561 | 2 |
| CR1 CR2 CR3 CR4 CR5 CR6 | DIODE | SCE-1 | SEMT | 4801-02-0001 | 6 |
| CR10 CR11 CR12 CR9 | DIODE | FD-777 | FAIR | 4807-02-0777 | 4 |

WAVETEK PARTS LIST | TITLE MAIN | ASSEMBLY NO. 1100-00-0213 | PAGE: 7 | REV L

| REFERENCE DESIGNATORS | PART DESCRIPTION | ORIG-MFGR-PART-NO | MFGR | WAVETEK NO. | QTY/PT |
|---|---|---|---|---|---|
| CR13 CR14 CR15 CR16 CR17 CR18 CR19 CR20 CR22 CR23 CR24 | DIODE | FD-6666 | FAIR | 4807-02-6666 | 11 |
| Q21 | TRANS | 2N2219A | NSC | 4901-02-2191 | 1 |
| Q22 | TRANS | 2N2905A | NSC | 4901-02-9051 | 1 |
| Q6 Q7 Q8 | TRANS | 2N3638A | CARTR | 4901-03-6381 | 3 |
| Q2 Q20 Q3 Q4 Q9 | TRANS | 2N3903 | NSC | 4901-03-9030 | 5 |
| Q10 Q11 Q19 | TRANS | 2N3905 | ITT | 4901-03-9050 | 3 |
| Q12 Q13 Q14 Q15 Q16 | TRANS | 2N5139 | FAIR | 4901-05-1390 | 5 |
| Q5 | TRANS | T1P-29 | T1 | 4902-00-0290 | 1 |
| Q1 | TRANS | T1P-30 | T1 | 4902-00-0300 | 1 |
| Q16 Q17 | TRANS, M/PR/2N3903 QTY: 2: 4901-03-9030 | 182-503-102 | WVTK | 4998-00-0015 | 1 |
| 9 | WAFER | 147-400 | WVTK | 5104-02-0015 | 7 |
| NONE | SWITCH STOP | 215-33-001-01-22 | CTS | 5104-07-0003 | 2 |
| NONE | DETENT MOD FROM: 5104-01-0010 | 180-313 | WVTK | 5104-99-0024 | 1 |
| NONE | DETENT MOD FROM: 5104-01-0010 | 180-314 | WVTK | 5104-99-0025 | 1 |
| RT1 | THERMISTER | LB12J2 | FNWL | 5300-00-0002 | 1 |

WAVETEK PARTS LIST | TITLE MAIN | ASSEMBLY NO. 1100-00-0213 | PAGE: 8 | REV L

| REFERENCE DESIGNATORS | PART DESCRIPTION | ORIG-MFGR-PART-NO | MFGR | WAVETEK NO. | QTY/PT |
|---|---|---|---|---|---|
| IC1 | IC | LM 301AN | NSC | 7000-03-0100 | 1 |
| IC8 | IC | LM318H | AMD | 7000-03-1800 | 1 |
| IC2 IC3 IC4 | IC | MA-741 | FAIR | 7000-07-4100 | 3 |
| IC11 | IC | CA-3019 | FAIR | 7000-30-1900 | 1 |
| IC7 | IC | CA-3054 | RCA | 7000-30-5400 | 1 |
| IC5 | IC | CA-3096AE | RCA | 7000-30-9600 | 1 |
| VR1 | VOLTAGE REGULATOR | 7805393 | FAIR | 8000-78-0500 | 1 |
| IC10 | IC | 74132 | TI | 8007-41-3200 | 1 |
| IC9 | IC | MC4044P | MOT | 8100-40-4400 | 1 |

WAVETEK PARTS LIST | TITLE MAIN | ASSEMBLY NO. 1100-00-0213 | PAGE: 9 | REV L

REMOVE ALL BURRS AND BREAK SHARP EDGES | MATERIAL | FINISH WAVETEK PROCESS | DRAWN | DATE | PROJ ENGR | RELEASE APPROV | TOLERANCE UNLESS OTHERWISE SPECIFIED .XXX ±.010 ANGLES ±1° .XX ±.030 | DO NOT SCALE DWG | SCALE

WAVETEK SAN DIEGO • CALIFORNIA

TITLE: PARTS LIST MAIN BOARD

MODEL NO 171 | DWG NO. 1100-00-0213 | REV L | CODE IDENT 23338 | SHEET 2 OF 2

NOTE: UNLESS OTHERWISE SPECIFIED

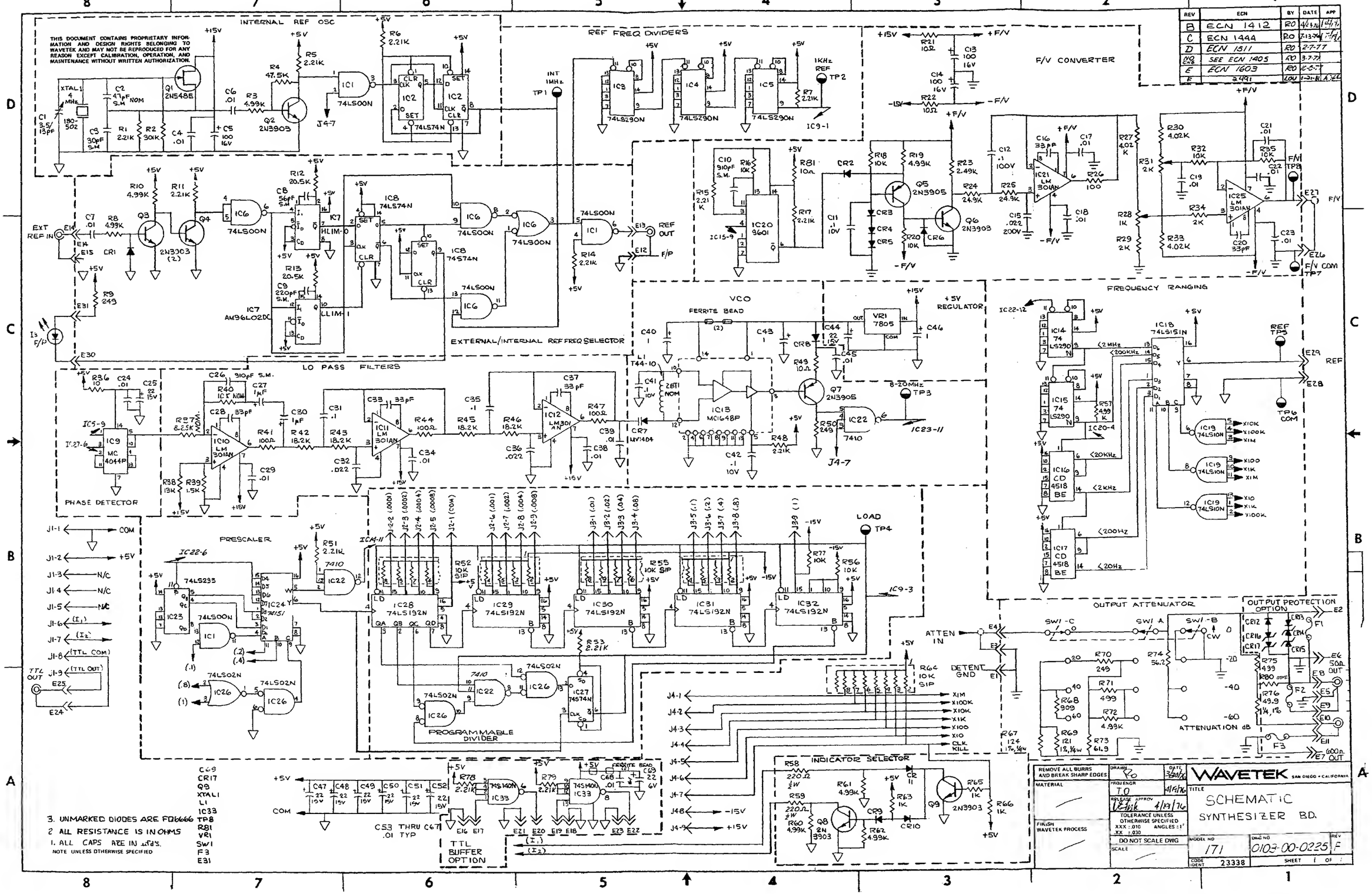


| REV | ECN | BY | DATE | APP |
|---|---|---|---|---|
| B | ECN 1412 | RO | 4/2/76 | |
| C | ECN 1444 | RO | 7/13/76 | |
| D | ECN 1511 | RO | 2-7-77 | |
| NO ECN | SEE ECN 1405 | RO | 3-7-77 | |
| E | ECN 1603 | RO | 6-5-77 | |
| F | ECN 1781 | LOU | 1-31-78 | |

THIS DOCUMENT CONTAINS PROPRIETARY INFORMATION AND DESIGN RIGHTS BELONGING TO WAVETEK AND MAY NOT BE REPRODUCED FOR ANY REASON EXCEPT CALIBRATION, OPERATION, AND MAINTENANCE WITHOUT WRITTEN AUTHORIZATION.

3. UNMARKED DIODES ARE FD6666
2. ALL RESISTANCE IS IN OHMS
1. ALL CAPS ARE IN μfd's.
NOTE UNLESS OTHERWISE SPECIFIED

C69, CR17, Q9, XTAL1, L1, IC33, TP8, R81, VR1, SW1, F3, E31

REMOVE ALL BURRS AND BREAK SHARP EDGES
MATERIAL
FINISH WAVETEK PROCESS
DRAWN RO 3/30/76
PROJ ENGR TO 4/6/76
RELEASE APPROV 4/13/76
TOLERANCE UNLESS OTHERWISE SPECIFIED XXX ±.010 XX ±.030 ANGLES ±1°
DO NOT SCALE DWG
SCALE
MODEL NO 171
DWG NO 0103-00-0225 REV F
CODE IDENT 23338
SHEET 1 OF 1

| REV | ECN | BY | DATE | APP |
|---|---|---|---|---|
| E | ECN 1809 | JRM | 9-9-8 | |
| F | ECN 2467 | LOU | 11-4-8 | |

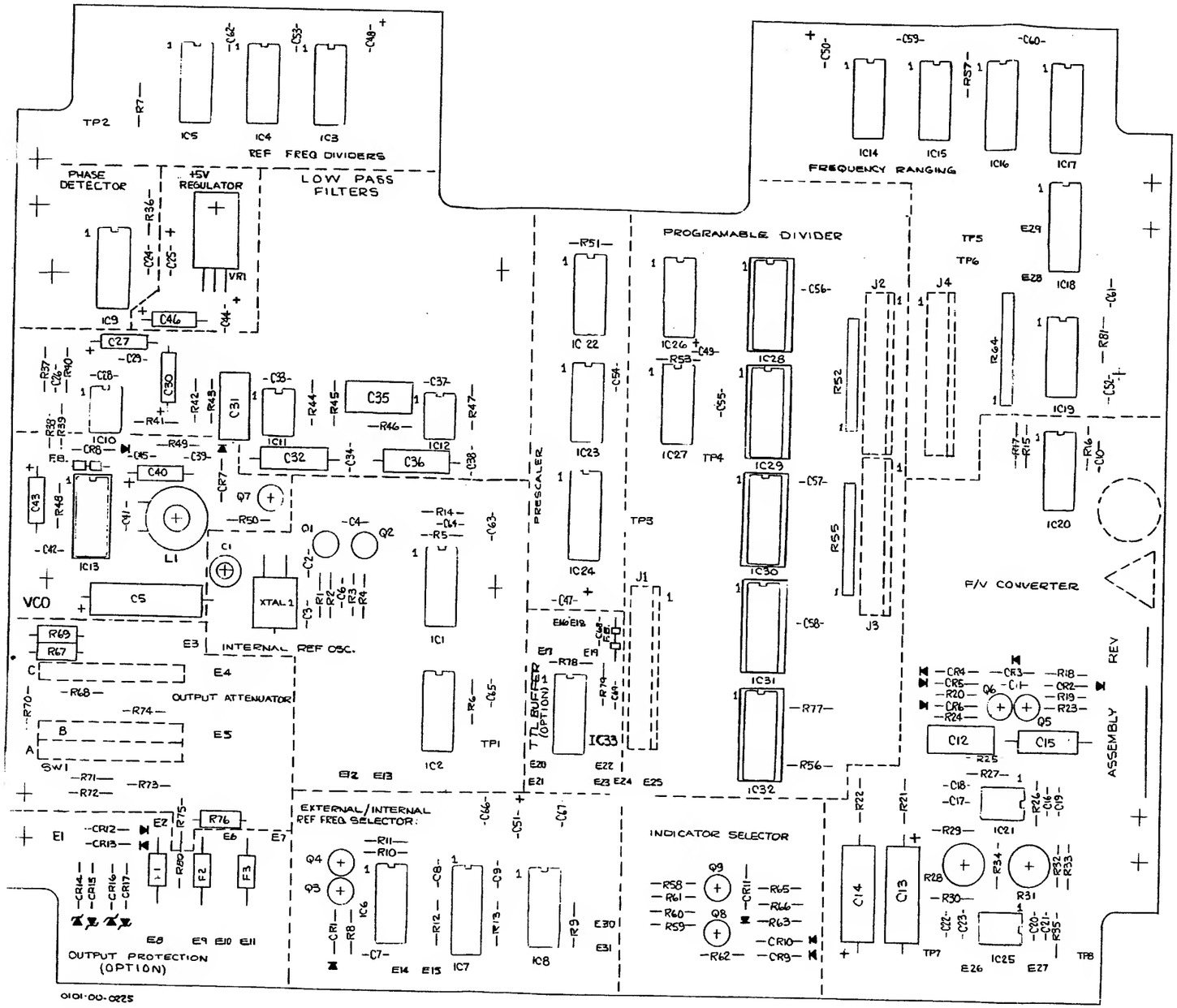


WAVETEK
0101-00-0225 F
SYNTHESIZER BD.
R 4.33.5
4-30-76
1 of 2

THIS DOCUMENT CONTAINS PROPRIETARY INFORMATION AND DESIGN RIGHTS BELONGING TO WAVETEK AND MAY NOT BE REPRODUCED FOR ANY REASON EXCEPT CALIBRATION, OPERATION, AND MAINTENANCE WITHOUT WRITTEN AUTHORIZATION.

| REV | ECN | BY | DATE | APP |
|---|---|---|---|---|

| REFERENCE DESIGNATORS | PART DESCRIPTION | ORIG-MFGR-PART-NO | MFGR | WAVETEK NO. | QTY/PT |
|---|---|---|---|---|---|
| NONE | ASSY DRWG, SYNTH | 0101-00-0225 | WVTK | 0101-00-0225 | 1 |
| NONE | SCHEMATIC, SYNTH | 0103-00-0225 | WVTK | 0103-00-0225 | 1 |
| NONE | OA PROC, SYNTH | 0107-00-0225 | WVTK | 0107-00-0225 | 1 |
| L1 | TRANS, TORROID | 5600-00-0011 | WVTK | 1204-00-0518 | 1 |
| 1 | SPACER | 144-306 | WVTK | 1400-00-2123 | 2 |
| 2 | SHIELD | 1400-00-5823 | WVTK | 1400-00-5823 | 1 |
| C17 C18 C19 C21 C22 C23 C24 C29 C34 C38 C39 C4 C45 C53 C54 C55 C56 C57 C58 C59 C6 C60 C61 C62 C63 C64 C65 C66 C67 C7 | CAP, CER. .01MF, 50V | CK-103 LONG LEAD | CRL | 1500-01-0300 | 30 |
| C11 C41 C42 | CAP, CER. .1MF, 10V | UK10-104 LONG LEAD | CRL | 1500-01-0402 | 3 |
| C16 C20 C28 C33 C37 | CAP, CER, 33PF, 1KV | DD-330 LONG LEAD | CRL | 1500-03-3001 | 5 |
| C9 | CAP, MICA, 220PF, 500V | DM15-221J | ARCO | 1500-12-2100 | 1 |
| C3 | CAP, MICA, 30PF, 500V | DM15-300J | ARCO | 1500-13-0000 | 1 |
| C2T | CAP, MICA, 47PF, 500V | DM15-470J | ARCO | 1500-14-7000 | 1 |
| C8 | CAP, MICA, 56PF, 500V | DM15-560J | ARCO | 1500-15-6000 | 1 |
| C10 C26 | CAP, 910PF, 100V, 5% | DM15-911J | ARCO | 1500-19-1100 | 2 |
| C13 C14 C5 | CAP, ELECT, 100MF, 16V | 500D107G016DC7 | SPRAG | 1500-31-0101 | 3 |

WAVETEK PARTS LIST | TITLE PCA, SYNTHESIZER | ASSEMBLY NO. 1100-00-0225 | PAGE: 1 | REV H

| REFERENCE DESIGNATORS | PART DESCRIPTION | ORIG-MFGR-PART-NO | MFGR | WAVETEK NO. | QTY/PT |
|---|---|---|---|---|---|
| R31 | POT, TRIM, 2K | 91AR2K | BECK | 4600-02-0201 | 1 |
| R58 R59 | RES, C, 1/2W, 5%, 220 | RC20GF-221 | STKPL | 4700-25-2200 | 2 |
| R26 R41 R44 R47 | RES, MF, 1/8W, 1%, 100 | RN55D-1000F | TRW | 4701-03-1000 | 4 |
| R63 R65 R66 | RES, MF, 1/8W, 1%, 1K | RN55D-1001F | TRW | 4701-03-1001 | 3 |
| R16 R18 R20 R32 R35 R40T R56 R77 | RES, MF, 1/8W, 1%, 10K | RN55D-1002F | TRW | 4701-03-1002 | 8 |
| R21 R22 R36 R49 R81 | RES, MF, 1/8W, 1%, 10 | RN55D-10R0F | TRW | 4701-03-1009 | 5 |
| R38 | RES, MF, 1/8W, 1%, 13K | RN55D-1302F | TRW | 4701-03-1302 | 1 |
| R39 | RES, MF, 1/8W, 1%, 1.5K | RN55D-1501F | TRW | 4701-03-1501 | 1 |
| R42 R43 R45 R46 | RES, MF, 1/8W, 1%, 18.2K | RN55D-1822F | TRW | 4701-03-1822 | 4 |
| R29 R34 | RES, MF, 1/8W, 1%, 2K | RN55D-2001F | TRW | 4701-03-2001 | 2 |
| R12 R13 | RES, MF, 1/8W, 1%, 20.5K | RN55D-2052F | TRW | 4701-03-2052 | 2 |
| R1 R11 R14 R15 R17 R48 R5 R51 R53 R6 R7 | RES, MF, 1/8W, 1%, 2.21K | RN55D-2211F | TRW | 47D1-03-2211 | 11 |
| R50 R70 R9 | RES, MF, 1/8W, 1%, 249 | RN55D-2490F | TRW | 4701-03-2490 | 3 |
| R23 | RES, MF, 1/8W, 1%, 2.49K | RN55D-2491F | TRW | 4701-03-2491 | 1 |
| R24 R25 | RES, MF, 1/8W, 1%, 24.9K | RN55D-2492F | TRW | 4701-03-2492 | 2 |
| R2 | RES, MF, 1/8W, 1%, 301K | RN55D-3013F | TRW | 4701-03-3013 | 1 |

WAVETEK PARTS LIST | TITLE PCA, SYNTHESIZER | ASSEMBLY NO. 1100-00-0225 | PAGE: 3 | REV H

| REFERENCE DESIGNATORS | PART DESCRIPTION | ORIG-MFGR-PART-NO | MFGR | WAVETEK NO. | QTY/PT |
|---|---|---|---|---|---|
| Q1 | TRANS | 2N5485 | MOT | 4901-05-4850 | 1 |
| SW1A SW1B SW1C | WAFER | 142-SW1-1 | WVTK | 5104-02-0013 | 3 |
| NONE | SWITCH STOP | 215-33-001-01-22 | CTS | 5104-07-0003 | 1 |
| SW1 | MODIFIED DETENT FROM: 5104-01-0010 | 5104-99-0026 | WVTK | 5104-99-0026 | 1 |
| IC10 IC11 IC12 IC21 IC25 | IC | LM 301AN | NSC | 7000-03-0100 | 5 |
| IC16 IC17 | IC | CD45188E | RCA | 8000-45-1810 | 2 |
| IC1 IC6 | IC | 74LS00 | TI | 8000-74-0010 | 2 |
| IC26 | IC | 74LS02 | TI | 8000-74-0210 | 1 |
| IC22 | IC | 7410 | TI | 8000-74-1000 | 1 |
| IC19 | IC | 74LS10 | TI | 8000-74-1010 | 1 |
| IC27 | IC | 74S74 | TI | 8000-74-7401 | 1 |
| IC2 IC8 | IC | 74LS74 | TI | 8000-74-7410 | 2 |
| VR1 | VOLTAGE REGULATOR | 7805393 | FAIR | 8000-78-0500 | 1 |
| IC20 | IC | 8601/9601 | FAIR | 8000-86-0100 | 1 |
| IC7 | IC | 96L02 | FAIR | 8000-96-0210 | 1 |
| IC24 | IC | 74151 | TI | 8007-41-5100 | 1 |

WAVETEK PARTS LIST | TITLE PCA, SYNTHESIZER | ASSEMBLY NO. 1100-00-0225 | PAGE: 5 | REV H

| REFERENCE DESIGNATORS | PART DESCRIPTION | ORIG-MFGR-PART-NO | MFGR | WAVETEK NO. | QTY/PT |
|---|---|---|---|---|---|
| C12 C31 C35 | CAP, POLYE, .1MF, 100V | 225P10491WD3 | SPRAG | 1500-41-0444 | 3 |
| C15 C32 C36 | POLYE, .022MF, 200V | 192P22392 | SPRAG | 1500-42-2304 | 3 |
| C1 | VARI, 3.5-13PF, 250V | 7S-TRIKO-02 3.5/13PF | TRIKO | 1500-51-3000 | 1 |
| C27 C30 C40 C43 C46 | CAP, TANT, 1MF, 35V | 150D105X9035A2 | SPRAG | 1500-71-0502 | 5 |
| C25 C44 C47 C48 C49 C50 C51 C52 | CAP, TANT, 22MF, 15V | 196D226X9015KA1 | SPRAG | 1500-72-2601 | 8 |
| NONE | SYNTHESIZER BD | 1700-00-0225 | WVTK | 1700-00-0225 | 1 |
| J1 J2 J3 J4 | CONN, 9PIN | 09-60-1091 | MOLEX | 2100-02-0052 | 4 |
| SKT6 | SKT, IC, 14PIN | 14-DIP | CINCH | 2100-03-0011 | 1 |
| SKT1 SKT2 SKT3 SKT4 SKT5 | SKT, IC, 16PIN | 16-DIP | CINCH | 2100-03-0022 | 5 |
| NONE | SOLDER LUG | 1497 | SMITH | 2100-04-0012 | 1 |
| 3 | PIN, MALE | 61182-2 | AMP | 2100-05-0020 | 27 |
| XTAL1 | CRYSTAL, 4MHZ | 180-502 | WVTK | 2300-99-0004 | 1 |
| 4 | STANDOFF, SWAGE .625 H, .250 HEX 6-32, .062 MAT'L | 1531B-5/8 | USECO | 2800-02-0004 | 4 |
| 5 | FERRITE BEAD | 56-590-65/3B | FERRX | 3100-00-0001 | 2 |
| R28 | POT, TRIM, 1K | 91AR1K | BECK | 4600-01-0209 | 1 |

WAVETEK PARTS LIST | TITLE PCA, SYNTHESIZER | ASSEMBLY NO. 1100-00-0225 | PAGE: 2 | REV H

| REFERENCE DESIGNATORS | PART DESCRIPTION | ORIG-MFGR-PART-NO | MFGR | WAVETEK NO. | QTY/PT |
|---|---|---|---|---|---|
| R27 R30 R33 | RES, MF, 1/8W, 1%, 4.02K | RN55D-4021F | TRW | 4701-03-4021 | 3 |
| R4 | RES, MF, 1/8W, 1%, 47.5K | RN55D-4752F | TRW | 4701-03-4752 | 1 |
| R71 R75 | RES, MF, 1/8, 1%, 499 | RN55D-4990F | TRW | 4701-03-4990 | 2 |
| R10 R19 R3 R57 R60 R61 R62 R72 R8 | RES, MF, 1/8W, 1%, 4.99K | RN55D-4991F | TRW | 4701-03-4991 | 9 |
| R74 | RES, MF, 1/8W, 1%, 56.2 | RN55D-56R2F | TRW | 4701-03-5629 | 1 |
| R73 | RES, MF, 1/8W, 1%, 61.9 | RN55D-61R9F | TRW | 4701-03-6199 | 1 |
| R37T | RES, MF, 1/8W, 1%, 8.25K | RN55D-8251F | TRW | 4701-03-8251 | 1 |
| R68 | RES, MF, 1/8W, 1%, 909 | RN55D-9090F | TRW | 4701-03-9090 | 1 |
| R69 | RES, MF, 1/4W, 1%, 121 | RN60D-1210F | TRW | 4701-13-1210 | 1 |
| R67 | RES, MF, 1/4W, 1%, 124 | RN60D-1240F | TRW | 4701-13-1240 | 1 |
| R76 | RES, MF, 1/4W, 1%, 49.9 | RN60D-49R9F | TRW | 4701-13-4999 | 1 |
| R52 R55 R64 | RES MODULE | 4310R-101-103 | BOURN | 4770-00-0003 | 3 |
| CR7 | DIODE | MV1404 | MOT | 4803-02-1404 | 1 |
| CR1 CR10 CR11 CR2 CR3 CR4 CR5 CR6 CR8 CR9 | DIODE | FD-6666 | FAIR | 4807-02-6666 | 10 |
| Q2 Q3 Q4 Q6 Q8 Q9 | TRANS | 2N3903 | NSC | 4901-03-9030 | 6 |
| Q5 Q7 | TRANS | 2N3905 | ITT | 4901-03-9050 | 2 |

WAVETEK PARTS LIST | TITLE PCA, SYNTHESIZER | ASSEMBLY NO. 1100-00-0225 | PAGE: 4 | REV H

| REFERENCE DESIGNATORS | PART DESCRIPTION | ORIG-MFGR-PART-NO | MFGR | WAVETEK NO. | QTY/PT |
|---|---|---|---|---|---|
| IC18 | IC | 74LS151 | TI | 8007-41-5110 | 1 |
| IC28 IC29 IC30 IC31 IC32 | IC | 74LS192 | TI | 8007-41-9210 | 5 |
| IC14 IC15 IC3 IC4 IC5 | IC | 74LS290 | TI | 8007-42-9010 | 5 |
| IC23 | IC | 74LS293 | TI | 8007-42-9310 | 1 |
| IC13 | IC | MC1648P | MOT | 8100-16-4810 | 1 |
| IC9 | IC | MC4044P | MOT | 8100-40-4400 | 1 |

WAVETEK PARTS LIST | TITLE PCA, SYNTHESIZER | ASSEMBLY NO. 1100-00-0225 | PAGE: 6 | REV H

NOTE: UNLESS OTHERWISE SPECIFIED

| | | | |
|---|---|---|---|
| REMOVE ALL BURRS AND BREAK SHARP EDGES | DRAWN | DATE | WAVETEK SAN DIEGO • CALIFORNIA |
| MATERIAL | PROJ ENGR | | TITLE PARTS LIST PCA, SYNTHESIZER |
| FINISH WAVETEK PROCESS | RELEASE APPROV | | |
| | TOLERANCE UNLESS OTHERWISE SPECIFIED .XXX ±.010 ANGLES ±1° .XX ±.030 | | |
| | DO NOT SCALE DWG | | MFR'S EL NO 171 / DWG NO 1100-00-0225 / REV H |
| | SCALE | | CODE IDENT 23338 / SHEET / OF |